City of Langley

DESIGN CRITERIA MANUAL

October 2021

ENGINEERING, PARKS & ENVIRONMENT DEPARTMENT

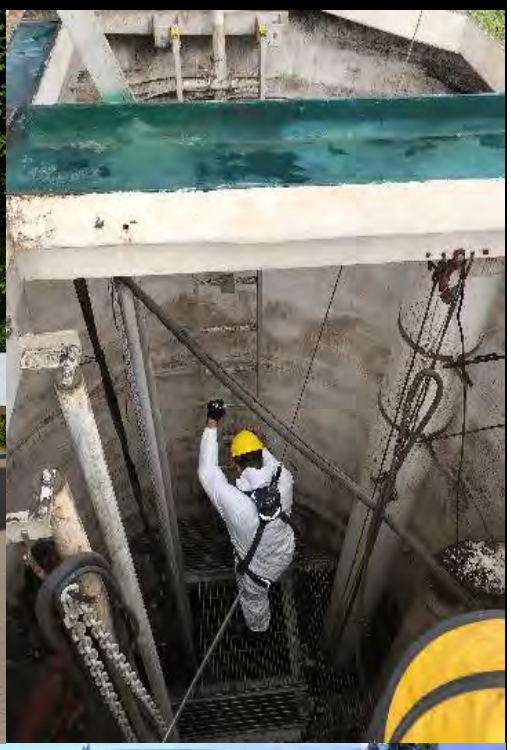

This page intentionally left blank

Table of Contents

SECTION 10.0 – TRAFFIC SIGNALS 126

INTRODUCTION

This Design Criteria Manual has been compiled to reflect the design requirements, material specifications, and installation requirements for Municipal Works constructed in the City of Langley.

Scope and Use of this Manual

The standard and specifications in this Design Criteria Manual shall apply to:

1. City of Langley capital projects;
2. *Works and Services* within highways and statutory rights-of-ways; and
3. *Works and Services* related to private *Developments/Subdivisions* that may affect the City of Langley infrastructures and/or are to be taken over by the City of Langley.

There are sections of this Manual which are not applicable to all the various users. However, contracts, designs and construction of works within the scope of this Manual shall comply with the intent of the manual and adhere to the design, specification and installation requirements outlined in this Design Criteria Manual.

Amendments to Design Criteria Manual

1. The *City Engineer* shall review this Design Criteria Manual from time to time to reflect generally used and accepted new design and construction methods in this Manual. Amendments to this Manual will be issued accordingly and the updated Design Criteria Manual will be posted on the City of Langley website.
2. It shall be the sole responsibility of the users of this Design Criteria Manual to ensure they are using the latest version of this Manual that includes all the amendments.

Definitions

The following definitions apply in this Design Criteria Manual. Unless otherwise defined in this Design Criteria Manual, all words or expressions in this Design Criteria Manual shall have the same meaning assigned to them as the same words or expressions contained in the *Land Title Act*, the *Local Government Act* and the *Community Charter*.

Words throughout the document that are italicized imply that word is defined in this section.

Amended Soil

means as outlined in Section 5.3.1 of this Design Criteria Manual.

Applicant

~~means a *Developer* applying for approval to subdivide or to develop lands either as the *Developer* or as a duly authorized agent of a *Developer*;~~

means *Consulting Engineer* or *Contractor.* When an *Owner or Owners* of land undertaking Subdivision/*Development* of their land, The *City Engineer* shall apply the requirements of the *Applicant* stated in this Design Criteria Manual to the *Owner or Owners* of such land and their *Developer*.

Approving Officer

means the person(s) appointed to that position for the *City* under the *Land Title Act*.

Arterial Road

see *Roads*

Bioswale

means an *Infiltration Swale* with 400 mm *Amended Soil* matrix that has vegetated open channels specifically designed to attenuate and treat rainwater *Runoff* for a defined water volume. The primary difference between a *Bioswale* and a vegetated *Swale* is that the soil underlying a *Bioswale* has been amended to readily accept rainwater and promote filtration through the soil matrix. Like open ditches, they convey larger rainwater volumes from a source to a discharge point, but unlike ditches, they intentionally promote slowing, cleansing and *Infiltration* along the way.

Boulevard

means the portion of a *Highway* not occupied by the *Roadway* or *Sidewalk* and includes *Plantings*, surface finishing or treatment.

Building

means a structure used or intended for supporting or sheltering any use or occupancy.

~~***Cash in Lieu***~~

~~means the payment of funds equivalent to the value of the work needed that the *City* would otherwise have been entitled to require to be conveyed as part of a *Subdivision/Development*~~.

City

means the City of Langley.

City Engineer

means the *Director* of Engineering, Parks & Environment or designate.

Community Charter

means the *Community Charter SBC 2003 C.26*.

Collector Road

see *Roads*

Commercial

means a category of land use as designated by the Official Community Plan and or *Zoning Bylaw* in which the predominant use of the land is for *Commercial*.

Consulting Engineer

means a Professional Engineer registered with the regulatory body under the “Professional Governance Act”, SBC2018, C47.

Contractor

means the person, including a corporation, ~~or firm~~ that will construct the *Works and Services* to the requirements, standards and specifications of this Design Criteria Manual.

Cul-de-sac

see *Roads*

Curvilinear Sewer

means a sanitary sewer section where its horizontal or vertical alignment is curved.

Developer

means the duly authorized agent *of the Owner* or *Owners* of land undertaking the *Subdivision/Development* of such land~~and shall include their duly authorized agent. Where appropriate, the *City Engineer shall apply* the requirements of the *Developer* stated in this Design Criteria Manual to the *Consulting Engineer* or *Contractor*~~.

Development

means the improvement of, or the carrying out of work on land, including but not limited to building, grading, tree removal and demolition and, for certainty, includes the *Re-Development*, and/or the improvement of land requiring the issuance of a permit.

Drainage System

means any system designed, constructed or installed for the express purpose of collecting, disposing, containing or conveying drainage whether such system is located on public lands, protected by registered statutory rights-of-way, in place historically, or previously approved by the *City* and includes, without limitation, storm sewer mains, ditches, *Swales*, creeks, ravines conveying or capable of conveying drainage or *Runoff*, *Watercourses*, detention and *Infiltration* systems, and roads.

EDU

means Equivalent *Development* Units. In respect of single or multi-family family *Development*, one self-contained dwelling unit and, in respect of non-residential *Development*, a unit of *Development* that the *City* considers will result in use of the excess or extended services that is equivalent to the use of such services by one self-contained dwelling unit.

Erosion and Sediment Control (ESC)

means the practice of preventing or controlling wind or water erosion and sediment transfer in land *Development* and construction projects to prevent water pollution and soil loss.

~~***Environmentally Sensitive Areas***~~

~~means areas defined in the *Official Community Plan* (*OCP*) as "preserved natural areas including steep slopes, sensitive habitat, and riparian corridors".~~

Final Acceptance

means the acceptance of the construction and installation of the required *Works and Services* completed to the standards and specifications set out in this Design Criteria Manual, as evidenced by the issuance of a Certificate of Acceptance signed by the *City Engineer* and is issued at the time the *Maintenance Period* expires.

Final Approval

means approval of a *Subdivision* plan by the *Approving Officer* when all applicable requirements of this Design Criteria Manual, the *Local Government Act*, the *Community Charter*, the *Land Title Act*, the *Strata Property Act* and all other relevant statutes, regulations and bylaws have been fulfilled and when applicable, all conditions of *Subdivision Preliminary Layout Approval* (*PLA*) have been fulfilled.

Floodplain

means the relatively flat or lowland area adjoining a river, *Stream*, watercourse, ocean, lake or other body of standing water which has been or may be covered temporarily with floodwater. For administrative purposes, the *Floodplain* is defined as per the *City*'s Floodplain Elevation Bylaw, as amended.

~~***Garage Pad Elevation (GPE)***~~

~~means the elevation of the garage floor of any *Building*.~~

Highway

means a public street, *Road*, recreational *Trail*, *Lane*, bridge, trestle, tunnel, ferry landing, ferry approach, and any other public way.

Highway Use Permit

means a permit issued by the *City Engineer* permitting *Works and Services* construction, installation or repair on any *City Highway* or *Walkway* where such work is not governed by a *Servicing Agreement.*

Hydraulic Grade Line (HGL)

means the height to which water would rise, due to pressure, if a standpipe were there.

Hydrograph

means a graph showing the discharge of water with respect to time for a given point on a *Stream* or conduit.

Imperviousness

means the ratio of impervious surfaces to total surface area within a *Watershed* or drainage area.

Industrial

means a category of land use designated by the *OCP* and or *Zoning Bylaw* in which the predominant use of the land is for *Industrial* purposes.

Infiltration

means:

(a) The entering of water through the pores of a soil or other porous medium.

(b) The entrance of water from the ground into a sewer or drain through porous walls, breaks, or defective joints.

(c) The absorption of water by the soil either as it falls as *Precipitation*, or from a *Stream* flowing over the surface.

***Integrated Rainwater Management Plan* (*IRWMP*) -** also known as Integrated Stormwater Management Plan

means a comprehensive, ecosystem-based approach to rainwater management. The purpose of an *IRWMP* is to provide direction to *Applicants* for future *Subdivision/Development* plans and *City-owned* projects to identify infrastructure needs and balance the land use needs with the natural values and functions of the watershed to protect the environment.

Land Title Act

means *Land Title Act RSBC 1996 C.250*, as amended.

Landscape Architect

means a person, including a corporation, registered as a member of the British Columbia Society of *Landscape Architect*s under the provisions of the "Architects (Landscape) Act", RSBC 1996 C.18 or Certified Landscape Designer registered by the BC Landscape Nurseries Association or other landscape professional as approved by the *City Engineer*.

Landscaping

means *Plantings* and landscape screening located on *Highway*s, *Boulevards,* medians, and private properties.

Lane

means a *Highway* that provides primary vehicular access to any abutting *Parcel.*

Local Government Act

means the *Local Government Act* RSBC 2015 C.1.

Local (Residential) Road

see *Roads*

Major Drainage System

means a rainwater collection system that consists of surface flood paths, roadways, roadway culverts, *Watercourse*s and stormwater best management practices (BMPs) designed to capture, convey, treat or modify larger flows up to a 100-year or possibly 200-year return period (where within the *City* flood plain areas).

Maintenance Period

means a period as set out in the *City*'s Subdivision and Development Servicing Bylaw- Schedule B, as amended from time to time.

Minor Drainage System

means a rainwater collection system that consists of pipe, gutters, catch basins, driveway culverts, open channels, water courses and stormwater best management practices (BMPs) designed to capture, convey, treat or modify flows up to a 5-year return period, as directed by the *City Engineer*.

Municipal Works and Services

means and includes *Highway*s, *Storm Sewer System*, *Sanitary Sewer System*, and *Water Distribution System* thereto owned and maintained by the *City*.

Minimum Building Elevation (MBE)

means the elevation of the lowest underside floor slab in a *Building* or the underside of the skim coat in the crawl space. The *MBE* is to be at least 0.6 m above the storm sewer service connection invert and 0.3 m above the *Major Drainage System Hydraulic Grade line* (HGL), whichever governs.

In areas with no storm collection systems and/or information on *Major Drainage System* HGL, the MBE is to be at least 0.3 m above the crown of the road.

The *MBE* at the designated Floodplain areas within the *City* shall be based on the Flood Construction Level (FCL), as defined in the *City*'s Floodplain Elevation Bylaw, as amended.

MMCD

means Master Municipal Construction Documents, as updated from time to time.

Multi-use Pathway (MUP)

means off-street pathways to accommodate uni-directional travel for cyclists and pedestrians.

Noxious Weed

means a weed designated as an invasive plant by the *Weed Control Regulation* under the provincial "Weed Control Act".

OCP

means the Official Community Plan for the *City*, as amended from time to time.

Overland Flow

means the flow of water over the ground surface before it flows to channels, *Swales* and ditches.

Owner

in respect of real property, has the meaning ~~attributed to it~~ in the *Community Charter* ~~definition of "owner"~~.

Panhandle

means a relatively long and slim portion of a *Parcel* designed to provide reasonable access to a *Highway* from the portion of the *Parcel* on which the *Building* area is located.

Parcel

means any lot, block or other area in which land is held or developed or into which land is subdivided, but does not include a *Highway*.

Plantings

means any *Landscaping* improvement including, but not limited to, topsoil, seed, sod, shrubs and trees.

Precipitation

means any moisture that falls from the atmosphere, including snow, sleet, rain and hail.

Pre-development

means land use condition immediately prior to the *Subdivision/Development* project being considered. When requirement exists to match *Runoff* rate or volume, unless otherwise approved by the *City Engineer*, the *Pre-development* condition would refer to the land use condition in the year 1975, where the majority of the City's *Storm Sewer System* was built.

Preliminary Layout Approval (PLA)

means the written conditional approval by the *Approving Officer* of a proposed *Subdivision* plan.

Qualified Environmental Professional (QEP)

means an individual, as defined by the "Riparian Areas Protection Act", that can be an applied scientist or technologist who is registered and in good standing with an appropriate BC professional organization constituted under an Act such as a professional Biologist, Agrologist, Forester, Geoscientist, Engineer, Technologist, or *Landscape architect*.

A *QEP* will only be considered a Qualified Environmental Professional if specifically possess proven credentials and recognized expertise in the area that will be providing all or part of an assessment report for the particular *Subdivision/Development*.

Re-Development

means a proposed *Subdivision/Development* in areas that have existing *Development*, but which are being re-developed or changed to a new or higher density form of *Development*.

Red-Lined

means a red-lined drawing that notes corrections, changes, or comments. These mark-ups show changes and comments made to the drawing subject matter during the *City*'s review process.

Road(s)

(a) Arterial

means a *Highway* whose primary function is to carry through traffic from one area to another with as little interference as possible from adjacent land uses, but which may provide direct access to property as a secondary function, particularly for large traffic generators;

(b) Collector

means a *Highway* whose primary function is to distribute traffic between *Arterial*, other *Collector*, or *Local Roads*, within an area but which also usually provides full direct access to properties;

(c) Local/Residential

means a *Highway* whose primary function is to serve vehicle trip ends by providing direct access to properties, and which usually connects to other *Local Roads* or to *Collector Roads*;

(d) Cul-de-sac

means a dead-end urban *Local (*residential) *Road* with one access point and no potential for future extension.

Retaining Wall

means a structure, constructed for the retention of soils, or an overall slope greater than two horizontal to one vertical.

Roadway

means the paved, constructed, or traveled portion of a *Highway* that is used for vehicular movement.

Runoff

means that part of the *Precipitation* which results in surface flow and in turn reaches a *Stream*, drain, sewer, etc., directly or indirectly.

SRW

means Statutory Right of Way.

Sanitary Sewer System

means a system designed and constructed for the collection, treatment and disposal of sanitary sewage.

~~***Security Deposit***~~

~~means cash, a certified cheque or an irrevocable automatically renewing Letter of Credit from a Canadian Financial Institution, deposited with the *City* by the *Developer* in accordance with the requirements of this Design Criteria Manual, to secure the design, construction and installation of the required *Works and Services* and *Landscaping* in accordance with the requirements, standards and specifications of this Design Criteria Manual.~~

Servicing Agreement

means an agreement between the *City* and an *Owner* or their authorized *Developer*, for the design, construction and installation of *Works and Services* in accordance with the specifications and standards of this Design Criteria Manual and the *City*'s Subdivision and Development Servicing Bylaw, that are required prior to use of lands to be developed.

Sidewalk

means the improved area of a *Highway* adjacent to the *Roadway* or *Boulevard* which is intended for the use of pedestrian traffic.

Source Controls

means integrated rainwater management techniques and/or facilities for retaining and treating rainwater at its source to best preserve or mimic the natural hydrologic cycle for typically occurring storm events.

Storm Sewer System

See *Drainage System*.

Strata Property Act

means the "Strata Property Act", SBC 1998 C.43.

Stream

means a *Watercourse* which has a flow of water for all or part of the year and has a defined channel showing signs of scouring and washing.

Structural Soil

means a growing medium designed with physical characteristics to support structures, as well as facilitate the growth of trees and shrubs.

Subdivision

means:

(a) A *Subdivision* as defined in the "Land Title Act"; and

(b) A *Subdivision* under the "Strata Property Act".

Substantial Completion

means, except for minor deficiencies, the completion of works required under the *Subdivision/Development* bylaw and/or *MMCD* except for minor deficiencies, a Certificate of *Substantial Completion* is issued by the *City Engineer*.

Surcharge

means the flow condition occurring in closed conduits when the *HGL* is above the conduit crown, or the transition from open channel to pressure flow.

Surveyor

means a land *Surveyor* currently licensed and registered in the Province of British Columbia under the "Land Surveyors Act" (RSBC 1996).

Swale

means a broad and shallow earthen ditch that might be vegetated with erosion resistant and flood tolerant grasses. *Swale*s are used to carry water as drainage.

TAC

means Transportation Association of Canada.

Trail

means an improved area of a *Highway* where the proposed *Trail* as inferred in the *OCP* or the Parks, *Trail* and Bicycle Master Plan.

Urban Area

means, those lands in the *OCP* designated as urban residential, compact/multiple family/apartment, townhouse, etc. (may also include *Commercial*, *Industrial*, or Institutional).

Walkway

means a public *SRW*, with or without improvements for the predominant use of pedestrians, but does not

include a *Sidewalk* on a *Highway*.

Water Distribution System

means a system of waterworks to provide potable water for human consumption and the fire hydrant system.

Watercourse

means a channel in which a flow of water occurs, either continuously or intermittently, and if the latter, with some degree of regularity. Such flow must be in a definite direction. *Watercourses* may be either natural or artificial, and the form may occur either on the surface or underground.

Watershed

means:

(a) an area surrounded by a continuous height of land within which all *Runoff* is expected to join into a single flow *Stream*, and which extends to the point of junction of the flow *Stream* with some pre-defined point of discharge at the lowest height of land in the drainage catchment area; or

(b) the area served by a *Drainage System* receiving storm and surface water, or by a *Watercourse*.

Works and Services

means any public service, facility or utility which is required under the Subdivision and Development Servicing Bylaw, as amended, plus what is described in this Design Criteria Manual, including, without limitation services, facilities, systems or utilities: the supply and distribution of water for domestic use and fire hydrant system; collection and disposal of sanitary sewage; collection and disposal of surface drainage and other waters; grading, erosion and sediment control; streetlighting; *Highways; Roadway*s; curbs; gutters; *Sidewalks*; *Trails*; traffic control signs and devices; *Roadway* markings; *Landscaping*; supply and installation of electrical power plant and communications plant; and all incidental associated works.

Zoning Bylaw

means the bylaw adopted under Division 5 of Part 14 of the “Local Government Act” that applies to any lot, Parcel, *Subdivision/Development* regulated under the Zoning Bylaw for the *City*, as amended from time to time.

SECTION 1.0 – General Information

1.1 Introduction

1.1.1. This Design Criteria Manual identifies the Engineering Requirements, Standards and Specifications which apply to the design, construction, and installation of *Works and Services* within the *City*.

1.1.2. In case of conflicts or discrepancies between provisions of the contents in this Design Criteria Manual and the *City*'s other related documents/bylaws, or if any material or product is in question, before proceeding, contact the *City Engineer* for clarification and/or approval.

1.1.3. In the absence of a statement of a standard for *Works and Services* or a definition provided in this Design Criteria Manual, the related standards and definitions contained in the 2019 Edition of Master Municipal Construction Document (*MMCD*) General Conditions and Construction document shall apply.

1.1.4. The requirements in this Manual are to be read in conjunction with the *City*'s Subdivision and Development Servicing Bylaw, as amended from time to time.

1.1.5. All *Consulting Engineers* conducting *Works and Services* within the *City*'s *SRW* shall submit to the *City Engineer* a signed and sealed copy of Form F-1 (Commitment by *Owner* and *Consulting Engineer*) prior to starting their *Works and Services*.

1.1.6. Language:

- While the use of the singular is usually preferred, this Design Criteria Manual uses plural to avoid a gender-specific pronoun when its use does not create ambiguity
- Different words are used throughout this Design Criteria manual to emphasize the degree to which a warrant or criterion requires adherence too. The following defines the intent of the commonly used word:

  Shall: Describes a mandatory condition.

  Should: Describes an advisory condition - it is desirable to do but not necessarily mandatory.

  May: Describes a permissive condition - it refers to situations where upon approval of the *City Engineer*, other options or methods can be accepted.

1.1.7. The *City Engineer* may consider variations to the design criteria set in this Manual, provided such variations, in the *City Engineer*'s opinion, will lead to improved technical and economical solutions.

1.1.8. For additional information, clarification or suggestions for changes and alternatives, please consult with:

Department of Engineering, Parks and Environment
City of Langley
20399 Douglas Crescent
Langley, BC V3A 4B3

Telephone: 604-514-2997
Fax: 604-514-2322
Email: engineering@langleycity.ca

1.2 Interpretation of the Design Criteria

1.2.1 The *City Engineer*'s interpretation of the contents of this Design Criteria Manual is final.

1.3 Construction Specifications

1.3.1 All construction within the scope of this Design Criteria Manual shall conform to the latest edition of *MMCD* as updated from time to time and the requirements, standards and specifications prescribed by this Design Criteria Manual.

- Should any conflict exist or arise between these documents, the *City*'s Design Criteria Manual shall take precedence over *MMCD*.

1.4 *Applicant's* Performance Responsibility

1.4.1 Where *Works and Services* are to be designed, constructed and installed within the *City*, the *Applicant* shall be aware of the areas and degrees of performance and responsibility required under this Design Criteria Manual.

1.4.2 The *City Engineer* shall be the *City'*s representative during the design, construction, installation, and maintenance of the *Works and Services*.

1.4.3 Work Performance

- The whole of the work, and the manner of performing the same, shall be done in accordance with the requirements, standards and specifications set out in this Design Criteria Manual to the satisfaction of the *City Engineer*, whose decision shall be final and binding.

1.4.4 Variation of *Works and Services* at *Applicant*'s Request

- Any variation to the *Works and Services* previously accepted shall be subject to review by the *City Engineer*. All requests for variations to the *Works and Services*, shall be designed and sealed by a *Consulting Engineer* on behalf of an *Applicant*, and shall be made in writing to the *City Engineer*.
- Any requests for variations shall include a signed and sealed revision to the previously accepted drawing(s). The *City Engineer*'s decision as to the acceptability of any revision(s) shall be final and binding.

1.4.5 Unforeseen Conditions

- If, at any time after the drawings have been accepted for construction, unforeseen conditions or circumstances become known which make it necessary that changes in the design or extra *Works and Services* be done in order to complete the project to good Engineering practice, the *City Engineer* shall have the right to order such changes or extra *Works and Services* as the *City Engineer* deems necessary to complete the *Works and Services* in an acceptable manner.
- All costs of such extra *Works and Services* shall be borne by the *Applicant*.

1.4.6 Verbal Agreements

- No verbal instruction, objection, claim or notice by any party to the other shall change or modify any of the terms or obligations contained in any of the requirements, standards or specifications, and none of the requirements, standards or specifications shall be held to be waived or modified by reason of such verbal instruction, objection, claim or notice.

1.4.6 Service of Notices

- Any notice, order, direction, request or other communication given by the *City Engineer* shall be deemed to be well and sufficiently given, if the same be left at any office used by the *Applicant* or be delivered to the *Applicant* '~~s Consulting Engineer or Contractor~~.

1.5 Conduct of Work

1.5.1 Prior to the commencement of work, the *Applicant* is required to meet with all neighbouring property *Owners* affected by the work to inform them of the project and schedule. The *Applicant* will report to the *City Engineer* in writing, the concerns raised by the neighbouring property *Owners* and that how those concerns will be addressed, to the satisfaction of the *City Engineer*, during the construction period.

1.5.2 Materials and Workmanship

- The whole of the work shall be done in a substantial and workmanlike manner with materials, articles, and workmanship of the best quality and description as required by, and in strict conformity with this Design Criteria Manual. Unless otherwise specified by the *City Engineer*, all materials shall be new.

1.5.3 Disposal of Excavated Materials – Soil Removal and Deposit

- Soil Deposit and Removal shall be carried out in compliance with the applicable Municipal Bylaws, and Federal and Provincial Legislation.

1.5.4 Existing Structures and Utilities

- Plans or descriptions, verbal or otherwise, of existing piping or structures that are given to the *Consulting Engineers* are intended only as an aid in the location of these items. Measurements and locations of the existing piping and structures are compiled from the most reliable information available. This information must be verified by the *Consulting Engineers* prior to proceeding with construction.
- The *City* does not check, review or maintain the accuracy of any plans, maps or elevations that are in its possession. The *Consulting Engineer* must review any information received from the *City*, and verify its accuracy by field investigation.

1.6 Rim Elevation for Two Lift Pavement System

1.6.1 On *Collector*, *Arterial*, *Commercial* and *Industrial Roads*:

If top lift of asphalt is scheduled to be poured within two weeks:

Rim elevations for manhole castings shall be set to the finished surface grade established for the second lift of asphalt and an asphalt ramp extending a minimum distance of one meter in all directions from the manhole casting shall be constructed. This ramp shall be ground out even with the first lift surface elevation prior to placement of the second lift.

Otherwise (i.e., greater than two weeks),

Rim elevations for manhole castings shall be set to the grade established for the first lift of asphalt, but raised to the final grade at time of second lift placement.

1.6.2 On *Local* (residential) *Roads*:

If top lift of asphalt is scheduled to be installed within one month:

Rim elevations for manhole castings shall be set to the finished surface grade established for the second lift of asphalt and an asphalt ramp extending a minimum distance of one meter in all directions from the manhole casting shall be constructed. This ramp shall be ground out even with the first lift surface elevation prior to placement of the second lift.

Otherwise (i.e., greater than one month),

Rim elevations for manhole castings shall be set to the grade established for the first lift of asphalt, but raised to the final grade at time of second lift placement.

1.6.3 Cast iron riser rings shall not be used to raise manhole casting to the finished surface grade.

~~Deep Excavation/Shoring Plan Requirements~~

~~The *City*'s requirements with respect to shotcrete removal and soil anchors on public property is outlined in the following notes, which shall be shown on the Excavation/Shoring Plan:~~

~~Shotcrete placed on *City* property within 1.5 meters of the finished ground surface must be removed;~~

~~1.7.1 Where in the opinion of the *City Engineer*, the proposed excavation poses a risk to public property, a *Security Deposit* shall be required. The *Security Deposit* shall be issued in the form of cash, a certified cheque or an irrevocable automatically renewing *Letter of Credit* prior to an excavation permit.~~

~~The *Security Deposit* will be held until all of the following has occurred:~~

- ~~Structure is to grade;~~
- ~~Backfill has been completed;~~
- ~~A Professional Geotechnical Engineer has provided a letter of certification stating the site and adjacent properties (private and public) are stable; and~~
- ~~video inspections of all nearby sewers before and after the excavation/shoring works to ensure there is no damage.~~

~~Once the *City* receives confirmation of the aforementioned requirements and the video comparison confirms there is no damage to adjacent utilities, the *Security Deposit* can be released.~~

~~The *Developer* will be responsible for all costs associated with the repair of damage to *City* infrastructure. If there is evidence of damage to *City* infrastructure, the *City* will proceed with the repairs and costs will be charged back to the *Developer*. The *Security Deposit* will be returned, less the amount incurred for repairs.~~

~~1.7.2 Depth of shotcrete removal may increase depending on the amount of shotcrete encroachment into *City* property. This will help to eliminate possible conflicts with future utility and service installations within lane and *Road* allowances;~~

~~1.7.3 Removal operation must be completed in stages and in such a manner that damage to adjacent utilities does not occur. Depth of shotcrete removal may be relaxed at the discretion of the *City* should conflict with adjacent utilities compromise their integrity;~~

~~1.7.4 Depth of shotcrete removal will increase to accommodate installation of services to the *Building*. Block outs may be incorporated in the placement of shotcrete to accommodate installation of these services;~~

~~1.7.5 All anchors installed on *City* property within 1.5 meters of finished ground surface must be removed. All anchors below 1.5 meters of finished ground surface must be de-tensioned or fully grouted for its entire length after the lock-off load has been applied.~~

~~1.7.6 De-tensioning and removal of anchors shall be completed concurrently with backfill placement in the presence of the *City*'s Inspector. Any de-tensioning works in the absence of the *City*'s Inspector shall be verified by the *City* at the *Developer*'s cost.~~

1.7.7 ~~A Letter of Assurance must be submitted to the *City Engineer*, ensuring the above issues are addressed.~~

1.7 Design Populations

1.7.1 *Consulting Engineers* shall use *EDU*/ha and their corresponding Population Equivalent per EDU (PE/EDU) estimates, as per the *City*'s Subdivision and Development Servicing Bylaw, as amended, to estimate sanitary sewer flows or water demands.

~~1.7.2 Where information on the number of units is available, the *Consulting Engineer* shall use the population estimates in the following Table to estimate sanitary sewer flows or water demands.~~

~~**Unit Type**~~	~~**Population**~~
~~Single Family Detached~~	~~3.2/unit~~
~~Townhouse~~	~~2.6/unit~~
~~SF compact~~	~~2.9/unit~~
~~Duplex, Triplex~~	~~2.6/unit~~
~~Apartment, Multifamily High Density~~	~~1.5/unit~~
~~Apartment, Multifamily Medium Density~~	~~1.6/unit~~
~~Apartment, Multifamily Low Density~~	~~2/unit~~
~~Downtown *Commercial* Zones~~	~~1/unit~~
~~*Commercial* - Servicing~~	~~90/ha~~
~~*Commercial* - Shopping Centres~~	~~150/ha~~
~~*Commercial* - Hotels, Convention Centre~~	~~300/ha~~
~~Institutional~~	~~150/ha~~
~~Private Institutional~~	~~90/ha~~
~~Light Industry~~	~~60/ha~~
~~Service *Industrial* Zone~~	~~50/ha~~

1.7.3 The *Consulting Engineer* shall confirm design population estimates with the *City Engineer* prior to designing sanitary sewer pipes or watermains.

SECTION 2.0 – Engineering Standards

2.1 Introduction

2.1.1 The purpose of this section is to outline the minimum standards and requirements the *City* will accept for the submission of quality design and record drawings (As-Builts) for *Works and Services*.

2.1.2 All works to be constructed shall be designed by a *Consulting Engineer* and in accordance with the standards and specifications prescribed by this Design Criteria Manual. In the absence of a related guideline in this Manual, the latest edition of *MMCD* Design Guideline Manual and *MMCD* Construction Specifications shall apply.

2.1.3 Incomplete or substandard submissions will be returned to the *Consulting Engineer* noting deficiencies.

2.1.4 All submissions for design of *Works and Services* shall comply with the following:

- All applicable requirements of this Design Criteria Manual;
- All applicable requirements of the *City*'s *Servicing Agreement*, when applicable; and
- All applicable requirements of the *City*'s Bylaws and Policies, as amended or replaced from time to time.

2.2 Survey Information

2.2.1 All surveys shall be conducted safely with minimal nuisance to traffic or the public at large. The *Applicant* ~~*and their Consulting Engineer and/or Contractor*~~ must obtain written permission from any *Owner* before entering their private property.

2.2.2 All elevations shall be from geodetic datum "NAD 83, CSRS" and "CVD28GVRD2018". Information regarding the location and elevation of existing Benchmarks within the *City* may be obtained from the Engineering Services.

2.2.3 Originating benchmarks and integrated survey monuments shall be noted on all applicable plans.

2.2.4 Copies of legible field notes shall be made available to the *City* upon request.

2.2.5 Centerlines (or offset lines) are to be marked and referenced in the field, and all chainages shall be keyed to the legal posting.

2.2.6 All existing items such as survey monuments, manholes, catch basins, fire hydrants, utility poles, and existing dwellings including fences, trees, hedges, and unusual ground formations shall be noted.

2.2.7 Where applicable or as requested by the *City Engineer*, cross-sections are required. The sections shall include locations and elevations of:

- Centerline of pavement;
- Edge of pavement;
- Gutter line;
- Top of curb;

- Back of *Sidewalk*;
- Edge of shoulder;
- Ditch invert;
- Top of ditch banks including high and low watermark(s);
- Property line;
- An existing ground elevation 3 m outside property line and 5 m beyond cut or fill slopes; and
- Toe and top of bank of cut and fill slopes.

2.3 Design Drawing Submissions

2.3.1 All drawings, as outlined in Section 12.0 of this Design Criteria Manual, shall clearly identify the *Works and Services* in sufficient detail. Drawings shall be inked and use minimum 80CL size Leroy lettering or digital CAD equivalent.

- For all *Subdivisions/Developments, Building* Permits, rezonings, etc., where the *City* will assume *Works and Services,* a complete set of Engineering Design drawings of proposed *Works and Services* is required.

2.3.2 All new *Works and Services* are to be shown in bold lines.

2.3.3 Specific notes pertaining to the construction of *Works and Services* are to be shown on the specific service drawing separate from standard notes referred in 2.3.1.

2.3.4 Baselines and chainages are to be referenced to at least one legal property line on each sheet.

2.3.5 Offsets are to be shown to both sides of the *Highway* or *SRW*, or to one side with the *Highway* or *SRW* width noted.

2.3.6 All drawings, except for the streetlighting plan, as described in Section 2.3.7, and the Street Tree and *Boulevard* Planting plan(s), as described in Section 2.3.8, shall be signed and sealed by the *Consulting Engineer* responsible for the design and construction supervision of the *Works and Services*.

2.3.7 Streetlighting plans and traffic signal design plans shall be designed, signed, and sealed by *a Consulting Engineer* with expertise in Electrical Engineering.

2.3.8 All *Landscaping* plans including Street Tree and *Boulevard* Planting plans shall be prepared by a Consulting Landscape Designer at the discretion of the *City Engineer*.

2.3.9 ~~Typically,~~ All drawings shall ~~should~~ be oriented to view northward or westward with chainages increasing from left to right and from bottom to top with North at the top or right side of the drawing; the Municipal Project "SUB" Number and reference file number(s) shall ~~should~~ be noted in the lower right-hand corner of all drawings; and plan/profile drawings shall have a plan below and a profile above.

2.4 ~~Legal~~ Plan Information

2.4.1 The *Applicant* shall provide a plan of the ~~legal~~ *Subdivision/Development* that shows ~~plan shall show~~ the following:

- The legal layout of *Roads* and properties;
- The legal descriptions of all properties included in the *Subdivision/Development*;
- Dimensions to the nearest 0.01 m;
- Existing house numbers of *Parcel*s adjacent to the proposed *Works and Services*; and
- All existing and proposed registered statutory rights-of-way and easements.

2.4.2 *Applicant*'s *Surveyor*s to provide digital copies of *Subdivision* plans in both DWG and PDF formats.

2.5 Design Submission Requirements and Sequence

2.5.1 The *Consulting Engineer* shall arrange a pre-design meeting with the *City* at which preliminary information and concept plans will be reviewed for initial comments.

2.5.2 The first submission shall consist of:

- An unlocked PDF and two complete sets of plans of the proposed *Works and Services* prepared, ~~sealed and signed~~ by the *Consulting Engineer* and, as required by the Consulting Electrical Engineer;
- Preliminary drawings that are incomplete or contain numerous errors shall be returned to the *Consulting Engineer* with a general note stating that *City* staff review will be done when a complete and error free set of drawings is submitted;
- All applicable calculations for the design of the proposed watermains, storm sewer infrastructures including detention/retention and sanitary sewers, etc.;
- A detailed geotechnical report;
- One additional set of *Landscaping* plans; and
- One additional set of Pavement Marking Street and Traffic Advisory plans.

2.5.3 Subsequent design submissions shall consist of:

- An unlocked PDF and two complete sets as in 2.5.2;
- All previous submission red line marked sets with all changes highlighted in yellow. Any red line marks not revised shall be accompanied by a memorandum outlining the reasons why the change was not made. Failure to do so will result in submissions being returned without review; and
- Any revisions or changes by the *Consulting Engineer* not part of the earlier submissions shall be identified and described in a memorandum explaining the changes.

2.5.4 The final submission shall consist of:

- A complete construction cost estimate signed and sealed by the *Consulting Engineer*; and
- An unlocked PDF version plus Five (5) complete sets of plans of the proposed *Works and Services*, signed and sealed by the *Consulting Engineer*, Electrical Engineer, and Consulting *Landscape Architect* as required.

The *City* does not confirm the completeness or accuracy of the design (construction) drawings. The *City* will not accept responsibility for any costs or damages resulting from errors, omission or deficiencies in said drawings.

2.6 Record Drawings (As-Built) Information

2.6.1 The record ~~As-Built~~ drawings shall show the *Works and Services* as they have been constructed in order to provide accurate and detailed information when adding to or maintaining the *Works and Services* shown on the plans.

2.6.2 The following procedure shall be followed in the submission of ~~As-Built~~ record drawings:

- The *Consulting Engineer* shall submit two complete sets of design drawings of the *Works and Services* showing all works as constructed (except for the *Road* cross-section sheet(s)), one set of photocopied Service Record Cards.
- One *Red-Lined* set of drawings will be returned to the *Consulting Engineer* for revisions if necessary. Depending on the number of notations or changes, the *Consulting Engineer* may be requested to resubmit two sets of revised paper prints for a second review.
- ~~As-Built~~ Record drawings shall be presented as follows:
  - The Key plan showing the as-constructed offsets and locations of all *Works and Services* including service connections;
  - The *Road* works, Watermain, Sanitary Sewer and Storm Sewer, plans showing elevations, inverts and off-sets as constructed. Profiles of the utilities shall state pipe materials, bedding and backfill used with chainages referenced to at least one legal posted *Parcel* line on each sheet;
  - The *Integrated Rainwater Management Plans* as constructed;
  - The Lot Grading plans showing as constructed ground elevations at all *Parcel* corners, rear *Building* envelop line, back of curb or *Sidewalk*, and any changes in grade across the *Parcel*. The *MBE*, Garage Pad Elevation (GPE), lawn basins, manholes and *Swales* and any other feature that may affect the construction of a *Building* on the *Parcel* shall be identified. Uniform grades between *Parcel* corners will be assumed to a tolerance of ±150 mm;
  - The Streetlight plans showing make, model, type of luminaire unit, illumination levels achieved with the as-constructed light spacing, locations of service bases, photocells and hydro service entrances as constructed;
  - Any plans and details for Pressure Reducing Valve (PRV) stations, pump stations etc. complete with any operating manuals, Letters of Assurance, and structural & geotechnical aspects of the construction etc.;
  - A final geotechnical report addressing all recommendations and details of the preliminary report, confirming construction techniques, applications and details including placement and compaction of fill materials stability of cut and fill slopes and embankments equal to or steeper than 2V:1H; and
  - An individual lot summary will be required for all lots that have been identified as having fill placed within the *Building* envelope. Where test pit logs indicate that over excavation will be required to competent native material the area shall be stripped of organics and structural fill pads shall be placed and compacted under the direct supervision of a Geotechnical Engineer. When fill pads have been constructed the individual lot summary shall include a survey of the finished pad complete with compaction reviews; and

- A geotechnical report including Letters of Assurance, structural, drainage, and confirmation of all *Retaining Wall*s in excess of 1.0 m in height.
- A completed "City of Langley As Constructed Tangible Capital Asset – TCA form. The record drawings ~~As-Builts~~ shall include a TCA Summary.
  - The electronic copy of the TCA form is available upon request.
  - The *City* will use the information given in the TCA form to prepare its *City*-wide Tangible Capital Asset (TCA) report.

- When the *City* is satisfied with the ~~As-Built~~~~record~~ drawing submission, the *Consulting Engineer* shall submit the following:
  - A letter with the following certification noted:
    - "I certify that these record drawings represent the *Works and Services* that have been supplied, constructed and installed in substantial conformance with the intent of the designs as accepted by the *City Engineer* dated _____."; and
    - The seal and signature on the letter shall be that of the *Consulting Engineer* who was personally responsible for the design and inspections.
  - One complete set of Service Record Cards for each *Parcel* submitted on a *City* Template as per Section 15.4 of this Design Criteria Manual.
  - A signed and sealed PDF and DWG/DXF formats of drawing files.
  - ~~Upon acceptance by the *City* and when applicable, the *City Engineer* may authorize a *Security Deposit* reduction to reflect the acceptance of the As-Built drawings, and Service Record Cards~~.

SECTION 3.0 – Water Distribution System

3.1 General

3.1.1 The design of water systems in the *City* shall conform to the requirements of the Canadian Guidelines for Drinking Water Quality, BC Drinking Water Protection Act and the ~~Public Health Act~~ BC Drinking Water Protection Regulation, the standards and specifications prescribed by this Design Criteria manual, and the latest edition of *MMCD* Design Guidelines, with the following supplementary provisions. In the event of a conflict between the supplementary provisions set in this Design Criteria Manual and *MMCD* Design Guidelines, these supplementary provisions will take precedence.

3.2 Pre-Design Requirements

3.2.1 The adequacy of the existing available water supply shall be confirmed with the *City Engineer* prior to design or any extension or connection to existing *City's Water Distribution Systems*.

3.2.2 The proposed *Water Distribution System* shall be designed to provide domestic requirements and fire protection, as specified herein.

3.2.3 The required flow shall be the sum of the maximum daily flow plus the required fire flow.

3.2.4 Watermains shall be looped to avoid dead-end mains. Dead-end watermains may be allowed at the discretion of the *City Engineer* when all the following conditions are met:

- The watermain services Single Family Residential zoned lands;
- The length of dead-end main is less than 100 m; and
- The watermain diameter is 150 mm.

Regardless, the *Consulting Engineer* shall confirm with the *City Engineer* whether a dead-end main is permitted.

3.3 Demand

The following demand rates shall be used to size watermains:

Scenario	Demand Rate
Average annual daily demand (**ADD**)	300 litres/capita/day
Maximum daily demand (**MDD**)	700 litres/capita/day
Peak hour demand (**PHD**)	1400 litres/capita/day

3.4 Fire Flow Requirements

3.4.1 Fire flow (FF) requirements for designing fire protection systems for Multifamily Residential, *Commercial, Industrial* and Institutional *Developments* in the *City* shall follow published criteria by the Fire Underwriters' Survey (FUS) entitled, "Water Supply for Public Fire Protection - A Guide for Recommended Practice" (latest edition). The *Consulting Engineer* shall submit calculations in an unlocked Microsoft Excel spreadsheet verifying the flow requirements. Any *Development* applications that do not submit this fire flow information will be rejected.

3.4.2 For fire flow analysis, the total demand (Q_{Design}) shall be:

$$\mathbf{Q_{Design} = MDD + FF}$$

3.4.3 The minimum acceptable fire flows for specified zones shall not be lower than flows set in section 3.8.5 of the *City*'s Design Criteria Manual.

3.4.4 If water modeling results show that the available Q_{Design} is less than the flow requirements as set by FUS calculations, or watermain flow velocity exceeds 3.25 m/s, the *Applicant* shall either improve, upgrade or extend the existing *Water Distribution System* sufficiently to provide the higher fire protection necessary for the site, or, take whatever other measures are necessary to reduce fire protection requirements of the proposed *Development* to match the level of protection available from the *City*'s *Water Distribution System*.

3.4.5 Where the *City* finds it necessary, the *City Engineer* may approve *City* payment (related to material only) for the cost of upsizing, beyond sizes required by these standards and specifications.

3.5 Sprinkler Systems

The *City*'s *Building* Bylaw stipulates the conditions for mandatory fire sprinkler systems for *Multifamily Residential*, *Institutional*, *Commercial*, and *Industrial Developments*. A *Consulting Engineer* with expertise in sprinkler system design shall size each water service connection to accommodate the anticipated fire sprinkler installations. Designs are to conform to the National Fire Protection Association standards.

3.5.1 Upon application for a *Building* Permit where each existing and future *Building* on a *Parcel* is or will be constructed with an automatic fire sprinkler system protecting the entire *Building*, the minimum fire flow required at that *Parcel* may be reduced to the greater of:

- The minimum fire flow calculated in accordance with the current FUS Standard allowing for automatic fire sprinklers; or
- The minimum flow required to support the automatic fire sprinkler systems plus all other water requirements for firefighting purposes on the *Subdivision/Development*.

3.5.2 Additions to existing Multifamily Residential, Institutional, *Commercial*, and Industrial *Buildings*, 30% or greater of the assessed value of the *Building*, shall require sprinklers to be installed in that *Building*. Any *Building* with an assembly occupancy permit will automatically require sprinklers. Refer to the *City*'s *Building* and Plumbing Bylaw, as amended.

3.6 Water Pressure

Criteria	Pressure	
	KPa	Psi
Maximum Static Pressure - ADD	1035	150
Minimum Static Pressure - PHD	300	44
Min Residual Pressure – PHD	300	44
Min Residual Pressure – MDD + FF	138	20

3.7 Hydraulic Network Considerations

3.7.1 The *Consulting Engineer* shall provide, at the discretion of the *City Engineer*, a hydraulic analysis of the proposed water system showing minimum flows and pressures.

3.7.2 Design computations shall be based on Hazen-Williams formula:

$$Q = \frac{CD^{2.63} S^{0.54}}{278{,}780}$$

Where:

Q	=	rate of flow in l/s
D	=	Internal pipe diameter in mm
S	=	Slope of *Hydraulic Grade line* in m/m
C	=	Roughness Coefficient
C	=	125 for all Polyvinyl Chloride (PVC) watermains
		Contact the *City Engineer* for other watermain materials

3.7.3 The minimum pipe grade shall be 0.1%. Where the maximum grade is greater than 10%, the main shall be constructed with joint restraints plus anchoring designed by a Geotechnical Engineer.

3.7.4 Flow velocities under MDD + FF condition within the existing watermains shall not exceed 3.25 m/s to avoid excessive surge pressures.

3.7.5 Design velocities under MDD + FF condition within the newly proposed watermains shall not exceed 2.0 m/s.

3.8 Hydraulic Modeling - Water

The *City* has adopted Innovyze InfoWater as its standard water modeling software application. Other programs may be considered if approved by the *City Engineer*.

Hydraulic modeling of the *City*'s water conveyance network may be needed to analyze system deficiencies due to the *Subdivision/Development* of lands.

3.8.1 Unless otherwise approved by the *City Engineer*,

- All *Subdivision/Development* applications with greater or equal to ten (10) residential units; and
- All *Industrial*, *Commercial*, and Institutional (ICI) applications with their MDD +FF requirements similar to these residential *Subdivision/Development* applications.

shall conduct a hydrant/water flow test and water modeling by the *City*'s standing hydraulic modeling consultant to determine if water flow and pressure in the *City*'s water distribution system under the future scenario (i.e., land use designations under the *City*'s *OCP*) is adequate for MDD + FF demand scenario.

3.8.2 For all residential *Subdivision/Development* applications with greater than four (4), but less than ten (10) units, and ICI applications with their MDD +FF requirements similar to these residential *Subdivision/Development* applications, a hydrant/water flow test and water modeling by the *City*'s

standing hydraulic modeling consultant may be required to determine if water flow and pressure in the *City*'s water distribution system under the OCP land use scenario is adequate for MDD + FF demand scenario. *Consulting Engineers* shall contact the *City Engineer* for direction in this regard before proceeding with their designs.

3.8.3 Hydrant/water flow tests and water modeling are not required for *Subdivision/Development* applications with less or equal to four (4) units.

3.8.4 All non-*Subdivision/Development* related modeling exercises shall be based on the existing and the future land-use designations, as specified by the *City*'s *OCP*. Conservative parameters shall be selected if calibration data is not available.

- The *City Engineer* may require additional 5-year incremental modeling scenarios to estimate asset upgrade timing for capital budget planning purposes.

3.8.5 Minimum acceptable fire flows for specified zones:

For a site development where specifics of the proposed *Building* structure are known, the *Consulting Engineer* shall evaluate the fire flow required in accordance with the FUS to set the minimum fire flow demand.

The flows given in the following Table are considered minimum acceptable values for *Water Distribution System* modeling for design and upgrade purposes under the existing and future land use scenarios set by the *City*'s *OCP*.

Land use	Minimum Fire Flow - FF (L/s)
Langley City Downtown	200
Single Family Residential	67
Duplex Residential	90
3 & 4 – Plex Residential, Townhouse and Row Housing	150
Apartment, High Density Multiple Residential	220
Commercial	180
Institutional	180
Industrial	225

3.8.6 Maximum Pressure Reducing Valve (PRV) velocity shall not exceed 6.0 m/s.

3.9 Watermains and Appurtenances

3.9.1 Watermain Pipe Sizes

Land Use	Minimum Acceptable Watermain Size
≤ 45 units per ha.	200 mm diameter *
> 45 units per ha.	250 mm diameter
Congregate Apt. and Institutional	250 mm diameter
Commercial	250 mm diameter
Industrial	250 mm diameter

* In all residential zones, watermains may be reduced to 150 mm diameter provided that:

- They are at the terminus of a system that cannot be extended in the future;
- Minimum fire flow and water pressure requirements are met; and

- The watermain services ≤ 18 single-family homes.

3.9.2 All watermains (new or replacements) shall be PVC (C900).

- All watermains (new or replacements) that cross creeks/waterways shall be high-density polyethylene (HDPE). The *Consulting Engineer* shall submit a signed and sealed Geotechnical report, determining how far the HDPE pipe should extend before and after the creek crossing to make sure it is seismically safe to switch back to PVC.
- The *City Engineer* may require ~~approve~~ other materials (e.g., Ductile Iron (DI), etc. in areas with compressible soils) when, in the opinion of the *City Engineer*, they offer better financial and/or operational advantages to the *City*. The *Applicant* shall confirm the required watermain materials with the *City Engineer* before finalizing their design.
- Regardless of the selected pipe material and unless otherwise approved by the *City Engineer*, a geotechnical corrosion analysis on the alignment of any proposed metallic watermain or metallic appurtenances shall be conducted to determine the corrosiveness of the native soils.

  Soil analysis shall be conducted by a corrosion engineering firm or personnel in accordance with a standardized evaluation procedure such as ANSI/AWWA Standard C105, Appendix A (10 point system) or 25 point system developed by William Spickelmire. Evaluation of the surrounding environment shall include sources of stray current, fluctuating water table, leak records (if available), and soil condition changes along the alignment.

  The results are to be used to predict the deterioration rate of the main and appurtenances. A copy of the corrosion analysis report and recommendations shall be provided to the *City*.
- If the soils are determined to be corrosive, measures such as cathodic protection shall be included to prevent the corrosion of the watermain and appurtenances to ensure the required minimum service life.
  - When cathodic protection is required, fitting, valves and hydrants shall be cathodically protected with zinc anodes.
  - Zinc anodes shall conform to ASTM B418-73 Type II.
  - Anodes on fittings and valves shall be minimum 2.3 kg and on hydrants shall be minimum 5.5 kg
  - No mechanical connections are allowed, weld anode to flange or back of hub with a bond wire.
  - Minimum distance from anode to pipe is 150 mm
  - Anode shall be embedded into the trench wall to provide a minimum of 50 mm of native soil completely surrounding the anode.
  - Anodes to be at least 300 mm clear of thrust blocks.
  - All exterior bolts on valves, hydrants and couplings shall be stainless steel type 304 or a *City* approved equivalent.
- All pipes shall have life expectancy of at least 50 years of service prior to a leak or failure.

3.9.3 Valves

- Valves shall be located as follows:
  - At *Road* intersections;
  - In a cluster at the pipe intersections;

- At hydrant tees;
- Every 200 m in *Residential* areas servicing densities ≤ 45 units/ha; and
- Every 150 m in Residential areas servicing densities >45 units/ha, and *Industrial*, *Commercial* & Institutional areas.

- The minimum number of valves at intersections shall be:
  - Four (4) where mains "Cross"; and
  - Three (3) where mains "Tee";
- Valves shall be the same diameter as the main up to 300 mm diameter. For mains larger than 300 mm in diameter, at the discretion of the *City Engineer* valves may be no more than one diameter size smaller.
- All direct bury mainline valves shall be resilient seat gate valves. Butterfly valves shall not be used unless approved by the *City Engineer*. Valves ≥ 400 mm diameter shall be provided with a bypass.

3.9.4 Pressure Reducing Valves/Stations

- Pressure reducing valves are required where water systems cross pressure zones.

3.9.5 Air and Vacuum Release Valves

- 25 mm (i.e., 1") Double Acting Air Valve manufactured by Terminal City Iron Works Ltd. or *City* approved equivalent shall be installed at all summit points and other locations as determined by the *Consulting Engineer*.

3.9.6 Valve Meter Chambers

- Chambers or manholes containing valves, blow-offs, meters or other appurtenances shall be connected directly to the *Sanitary Sewer System* complete with appropriate back flow protection. Chambers or manholes may be drained to the surface or to absorption pits, subject to adequate soil conditions and the approval of the *City Engineer*. Mechanical or automated systems for de-chlorination of expelled or leaking water shall be incorporated at the discretion of the *City Engineer*.

3.9.7 Dead Ends

- Where dead ends are unavoidable and when approved by the *City Engineer:*
  - The size of the last 5.0 m of a *City* approved dead-end watermain shall reduce to 100 mm with a blow-off or fire hydrant installed at the end of the system.
  - When in the *City Engineer*'s opinion noise is not a concern, an auto flushing device may be accepted at the end of a dead-end watermain. The *Consulting Engineer* shall confirm with the *City Engineer* whether such a device is permitted.

3.9.8 Blow offs and Blow Downs

- Blow offs shall be provided at the end of all mains which will be extended. For all watermain pipe sizes, the blow off shall be 100 mm diameter.
- Unless otherwise directed by the *City Engineer,* on all mains greater than 300 mm diameter, blow downs shall be installed at the lowest point in the watermain profile between the line valves.

3.9.9 Mechanical Joint Restraints and Thrust Blocks

- Provide thrust blocks or joint restraints or tie rods on tees, bends, caps, hydrants, blow offs, blowdowns, carrier pipes in casings, and all connections to the PRV stations.

  Details in the Section W of the standard drawings may be used as a guideline only. *Consulting Engineers* shall design thrust blocks with due regard for pipeline pressure transients and expected test pressures.

  Reverse acting thrust block (RATB) will be used unless the *Consulting Engineer* determines otherwise. The RATB will be fitted with tie rods and the *Consulting Engineer* must determine if future infrastructure may jeopardize the integrity of the proposed thrust restraint and modify the design accordingly. Thrust restraints to be in accordance with the *City*'s Supplementary Specifications.

  The *Consulting Engineer* shall submit calculation of the length of pipe to be restrained, and must provide inspection and certification that the construction of the joint restraint conformed to the design. If the joint restraint cannot be certified to have been constructed as designed, it is to be replaced by concrete thrust blocks without any allowance for partial restraint at the pipe joints. Pipes in casing pipes will not be included in the length of pipe necessary to develop the thrust restraint. All joint restraint devices will have twist-off nuts to ensure equal and adequate tightening of the restraint wedges is achieved.

3.9.10 Reservoir and Pump Capacity Analyses

- Reservoir capacity analyses shall be performed in project locations that are fed by the *City*'s reservoir.
  - The required reservoir capacity shall be calculated based on the latest edition of *MMCD* Design Guidelines.
- The *City*'s water pump station capacity shall also be assessed when the project location is fed by the *City*'s reservoir.
  - The required pump capacity for the *City*'s "Pumped" pressure zone shall be equal to MDD plus the fire flow requirement of the project (MDD+FF).
    - FUS calculation results and water modeling are needed for this analysis.

3.10 Hydrants

3.10.1 The lateral connection type, colour and location of all fire hydrants or other Fire Department connections shall follow the *City*'s Fire Protection and Safety Bylaw, as amended, and be subject to the approval of the Fire Chief.

3.10.2 Fire hydrants shall be:

- Located within *Highway SRW* in *urban areas* at a maximum spacing of 150 m. and, where possible, within 75 m of all possible *Building Parcel*s. Maximum spacing in *industrial* areas shall be 125 m.
- Required to have a 4" STORZ adapter plus two 2-1/2 inch ports, and a locking cap.
- If within a private *Parcel*:
  - Located so that there is a clear radius of a minimum 1.5 m around the hydrant at all times measured from center of hydrant; and

- Shall be compliant with all Fire Service bylaws

- Located in accordance with the appropriate Standard Drawing or as designated by the *City Engineer*;
- Located at the end/beginning (E.C./B.C.) of curb returns in *Highway* intersections where possible;
- Located at least 3.0 m away from a streetlight, utility pole, street tree or driveway; and
- Where possible: located opposite a property line between two *Parcel*s or at the beginning of the radius of truncation for a corner *Parcel*.

3.11 Service Connections, Water Meters and Tie-Ins

3.11.1 Typical Location of *City* service connections are shown in the Section 15.4 (G section drawing).

3.11.2 Appendix A in this Section outlines the requirements for the *Applicant* to install water meters on *City* water services.

3.11.3 The *Consulting Engineer* shall determine the size of a proposed service connection. The standard single-family residential connection in the *City* is 25 mm.

3.11.4 Water services from 25 to 50 mm shall include a "10 gauge tracer wire" from the corporation stop to inside the meter box or valve stand pipe, and at least 300 mm above the finished ground surface.

3.11.5 Water meters are required for all residential, *Commercial* and *Industrial Development*s as per the *City*'s Waterworks Regulations Bylaw, as amended.

3.11.6 Supply and installation of water meters shall be in accordance with the standards and specifications of Waterworks Regulation Bylaw, as amended.

3.11.7 Water meter boxes shall be set flush with the proposed finished elevation of the *Boulevard* or hard surface area.

3.11.8 Service connections shall be located so they are not in driveways or under traveled areas wherever possible. Should this be unavoidable, meter chambers shall be capable of supporting dynamic H-20 loading.

3.11.9 All service connections to existing mains are to be installed by the *City* crews at the expense of the *Applicant*.

3.11.10 All tie-ins to existing mains are to be done by *City* crews at the expense of the *Applicant*. Typically, a tie-in deposit will be taken prior to work being done. The *Applicant* will be charged for the work done by *City* crews.

3.12 *Water Distribution System* Location/Corridors

3.12.1 All proposed *Water Distribution Systems* within *Highway SRW* shall be located as shown on the typical cross-sections or as designated by the *City Engineer*. Where a *Water Distribution System* crosses private property, it shall be protected by an *SRW*. The width of the *SRW* shall be dependent on the depth of the main as follows:

Depth of Watermain	Width of SRW
≤ 2 m	3 m

> 2 m & ≤ 4 m	4 m
> 4 m	6 m

Additional *SRW* width may be required by the *City Engineer* based on a site-specific analysis.

~~3.12.2 When a *Water Distribution System* is within an *SRW* on private property, The *City Engineer* may require a signed and sealed geotechnical report to investigate the soil condition to recommend whether a Restrictive Covenant on Title to restrict the depth and location of any proposed footings, *Buildings*, overhangs etc. in the vicinity of the watermain is required.~~

3.12.3 When a *Water Distribution System* is located within *an SRW*, the *Owner* will be required to provide access for maintenance vehicles. The maintenance access shall be constructed to withstand H-20 loading.

3.12.4 A new *Water Distribution System* by an *Applicant* shall not be connected to the *City*'s *Water Distribution System* until:

- Pressure testing, chlorination testing, and bacteriological testing have been completed, passed and accepted by the *City Engineer*;
- The Building Division's Form A and Form B are submitted; and
- An *SRW* has been registered in the Land Title Office.

3.13 Cover

3.13.1 Minimum cover over the crown of any watermains shall be 1.2 m and minimum 0.6 m over appurtenances.

3.13.2 Maximum cover over watermains shall be 3.0 m unless approved by the *City Engineer*.

3.14 Separation from Other Utilities

3.14.1 *Water Distribution Systems* constructed in proximity to other utilities shall conform to the criteria of the Provincial "Drinking Water Protection Act" and other relevant Regulations.

3.14.2 When crossing under an Asbestos Cement (AC) pipe, a minimum 3 m length of the AC pipe (1.5 m each side of the crossing point) shall be removed and an equal length of PVC pipe (or any other pipe materials, as approved by the *City Engineer*) shall be inserted. Such work must be carried out by the *City* forces.

3.14.3 When a new utility runs under an AC watermain, a segment of that AC watermain shall be replaced with PVC pipe and extend 1.0 m into each side of the trench cut.

3.14.4 For parallel mains there shall be a minimum of 0.5 m vertical or 3.0 m horizontal separation of the watermain from any storm or sanitary sewer - with the watermain being above.

3.14.5 Where the requirements of 3.14.3 cannot be met, the following measures are to be taken:

- For crossing services, when the watermain is closer than 0.5 m vertical to a sewer, but above the sewer, the watermain must be laid in such a manner that crossing is made midway between joints on a full length of watermain. If this is not attainable the watermain joints are to be wrapped with heat shrink plastic or packed with compound and wrapped with tape.

- When the watermain crosses beneath the sewer there shall be a minimum 0.3 m vertical separation. The crossing shall be made midway on a full length of watermain pipe. The watermain joints are to be shrink-wrapped or packed and taped as above.
- When 3 m horizontal or 0.5 m vertical separation is unattainable, all watermain joints are to be wrapped as above.
- Wrapping:

  ANSI/AWWA C214 (factory applied)

  ANSI/AWWA C209 (field applied)

  ANSI/AWWA C217-90 (petrolatum tape)

  “JointWrap” – Cold – Applied Pipe Joint Sleeve (to be applied per manufactures specifications)

  All materials used are to have zero Health Hazard.

Appendix A – Water Meter Specifications

A.1. Preamble

The following specifications detail the *City*'s requirements for the installation of meters on *City* water services.

An *Applicant* is responsible for the supply and installation of meters and associated piping, chambers and equipment on metered water services. The meter information must be provided to the *City* for review and acceptance prior to the installation and activation of the service.

The specifications detail acceptable water meter types, location and installation requirements.

A.2. Definitions

ANSI: American National Standards Institute.

ASTM: American Society for Testing and Materials.

AWWA: American Water Works Association

Activation: Opening of the service valve to permit the flow of water.

FM: Factory Mutual Engineering and Research Organization, a research and testing agency accepted by the Insurance Industry.

UL: Underwriters' Laboratories, a research and testing agency accepted by the Insurance Industry.

A.3. Services to be Metered

The Waterworks Regulation Bylaw, as amended, identifies services that require meters. This includes, but is not limited to, all property intended for residential, *Commercial*, *Industrial*, institutional, agricultural, or public use.

All services to such properties including fire, domestic services and water meter bypass services shall have meters.

A.4. Location of Meters

Unless otherwise approved by the *City Engineer*, water meter location, supply and installation shall be per Table below:

Type of *Building* / Land Use	Location	Supply & Installation of Meter, Chamber & Accessories
Residential (Single Family, Duplex)	At Property Line (on *City* property side), as shown in Section G of the standard drawings	Installed by the *City* at *Owner*'s cost
Residential (Triplex, or Fourplex, or Multi-family)	In chamber or mechanical room*	Installed by the *Owner* at *Owner*'s cost
Stratified Townhouses	In chamber or mechanical room*	
Industrial, Commercial, Institutional (ICI)	In chamber or mechanical room*	
Mixed-use	In chamber or mechanical room*	

*- no connections to the *City* water distribution system are allowed prior to the water meter installation.

- Details/specifics on meter locations shall be approved and finalized by the *City Engineer*.
- In all cases, the *Owner*, per the requirements outlined in the *City*'s Waterworks Regulation Bylaw as amended, shall grant site access to the *City* staff at any time ~~an *SRW*~~ for water meter inspections, repairs, or replacements~~access the water meter at any time~~.
- Where the water meter cannot be installed in an open area within the property and when the *City Engineer* approves the water meter to be installed within a *Building*:
  - The installation shall be within reasonable distance of a floor drain;
  - The floor drain shall be suitably sized to accept the flows associated with meter testing;
  - The meter shall be installed a minimum of 600 mm above the floor slab;
  - A space of at least 1.0 m horizontal and 1.0 m vertical from the meter assembly shall be free of obstruction to allow for convenient servicing and testing of the meter at all times;
  - No electrical, mechanical, or water-sensitive equipment shall be placed or installed under the meter assembly or in an area where splash or flow from the meter assembly could occur during the servicing of the meter; and
  - A remote receptacle outside the unit shall be installed with a radio transmitter end point at a location approved by the *City Engineer.*

A.5. Meter Types

- All water meters shall be ~~Neptune~~ a model approved by the *City Engineer*.
  - Presently approved models include the Neptune.
- The actual meter or combination of meters accepted for use must accurately account for the total water use of the property serviced. All meters must be new and conform to NSF 61 standards. Used or reconditioned meters are not acceptable. All fittings and appurtenances that come into contact with potable water must be NSF 61 certified and compliant.
- There are three types of cold-water meters accepted for use by the *City*. These are positive displacement, compound, and ultrasonic types.
  - Positive Displacement meters are to be either oscillating piston or nutating disc type to AWWA C-700. Meters are to have a bronze case with cast iron or plastic frost protection cover.
  - Compound meters are to conform to AWWA C-702. All compound meters are to have a bronze case and flanged connections.
  - Ultrasonic meters (Mach 10) for 75 mm or larger in size meters are to conform to AWWA C-715.

A.6. Registers

All meters are to have direct reading, sealed encoder and remote registration. All registers are to have a digital flow indication. All registers shall be minimum 8-digit high-resolution type. The unit of measure shall be cubic meters (m^3). Registers must be new; used or reconditioned registers are not acceptable. Registers must be compatible with interrogation equipment used by the *City*.

Registers shall allow electronic reading of the meter with a portable data acquisition (radio) unit. The antenna shall be designed for wall mounting or mounting in the meter chamber lid, as appropriate. The unit must, in a digital format simultaneously encode at least eight significant digits of the meter reading for transmission through the antenna. A unique meter identification number must also be provided with each read.

Registers shall be read with a Radio Meter Interface Unit.

All registers must be provided with moisture protection for internal components when operating under flooded pit conditions. The materials employed for contacts and connectors must inhibit corrosion and must suffer minimal effect from environmental conditions to which they are exposed.

A.7. Remote Radio Read Equipment

All properties shall be radio read type meters.

Accepted Devices: Neptune E-Coder R900i or E-Coder register with R900 Wall MIU (where applicable).

- For meters installed in a pit: "Neptune E-Coder R900i - pit version" shall be used and the antenna shall be mounted through the lid.
- For meters installed inside the *Buildings*, "Neptune E-Coder" shall be installed and a Wall R900 MIU to be mounted on the outside of the building facing the street.
  - Note: Compound water meters will require two Wall R900 MIUs (one per E-Coder register).

A.8. Meter Selection

The type or combination of types of meters selected for recording water consumption from a service must accurately record consumption for the expected range of flow. The size selected must ensure pressure losses are within acceptable limits and provide long meter life. The *Consulting Engineer* must ensure that the meter selection and installation requirements are adequate for the design application.

A meter may be one pipe size smaller than the service except for bypass meters. The *Consulting Engineer* must ensure that the reduction neither compromises the operating range of the meter nor results in unacceptable head losses. The size selected shall ensure pressure losses are within acceptable limits and provide long meter life.

The following table provides a guide for acceptable meter types and sizes for a range of uses and flows. Flow rates are in accordance with AWWA specifications.

Size		Acceptable Meter Type	Flow Rates (m^3/h)
mm	in		Norm Op Range
16	5/8	Positive Displacement	0.2 - 4.5
19	¾	Positive Displacement	0.5 - 6.8
25	1	Positive Displacement	0.7 - 11.4
38	1 ½	Positive Displacement	1.1 - 22.7
50	2	Positive Displacement	1.8 - 36.3
50	2	Compound	0.23 - 36.0
75	3	Compound	0.45 - 79.0
100	4	Compound	0.68 - 136.0
150	6	Compound	1.1 307.0
200	8	Compound	3.6 - 360.0
75	3	Mach 10 Ultrasonic	0.2 - 113.6
100	4	Mach 10 Ultrasonic	0.3 – 283.9

Size		Acceptable Meter Type	Flow Rates (m^3/h)
mm	in		Norm Op Range
150	6	Mach 10 Ultrasonic	0.45 – 454.2

A.9. Dedicated Fire Services

Fire services are to be metered to detect unauthorized use and leaks in the system. Provide all fire services with a detector check valve with meter trim package in combination with an appropriately sized "tattle tail" displacement type meter on a bypass. Install tattle tail meters in accordance with these specifications. An approved double detector check assembly with a "tattle tail" meter may be used in place of the detector check valve, to satisfy fire sprinkler system back-flow prevention requirements.

A.10. Water Meter Bypass Lines

All water meter bypass lines shall have a line-sized water meter installed to detect unauthorized use. The meter shall be equipped with a register (see Section A.6) and Radio Read transmitter (see Section A.7).

A.11. Installation Requirements

Installation requirements are summarized on the following table and illustrated on the appended typical drawings.

Size Mm	Type[1]	Bypass[2] Required	Strainer Required	Chamber[3]		
				Type	Size (mm)	Model
16	Positive Displacement	No	No	Meter Box	300x500	Brooks 37
19	Positive Displacement	No	No	Meter Box	300x500	Brooks 37
25	Positive Displacement	No	No	Meter Box	425x750	Brooks 66
38	Positive Displacement	No	No	Meter Box	600x900	AEC 5686
50	Positive Displacement	No	No	Meter Box	600x900	AEC 5686
50-75	Compound	Yes[4]	Yes	Vault	1220x2000	AEC 2121
100	Compound	Yes[4]	Yes	Vault	3260x1760	AEC 3151
150	Compound	Yes[4]	Yes	Vault	3260x1760	AEC 3151
100-150	Detector Check	No	No	Vault	1220x2000	AEC 2121
200	Detector Check	No	No	Vault	3260x1760	AEC 3151
75	Mach 10[5] Ultrasonic	Yes[4]	Yes	Vault	1220x2000	AEC 2121

Size Mm	Type[1]	Bypass[2] Required	Strainer Required	Chamber[3]		
				Type	Size (mm)	Model
100	Mach 10 Ultrasonic	Yes[4]	Yes	Vault	3260x1760	AEC 3151
150	Mach 10 Ultrasonic	Yes[4]	Yes	Vault	3260x1760	AEC 3151

Note [1] A bypass is not required for dedicated irrigation meters.
Note [2] Installations for meters not shown on the above table must be designed by the *Consulting Engineer*.
Note [3] Chamber Lids are to be pre-drilled with a 45 mm dia. remote receptacle hole. Meter pits shall not be installed in vehicular traveled areas.
Note [4] Bypass size to be determined by *Consulting Engineer* and approved by the *City Engineer.*
Note [5] Ultrasonic meters less than 75mm may be considered for some applications but must be approved by the *City Engineer*.

Installation and Piping Requirements:

Contractor shall install meters horizontally with register casings plumb, facing upward. Where installed in a meter box, centre meter in box.

All connecting piping valves and fittings shall be equal to the diameter of the meter for a distance of at least 3 pipe diameters upstream of the meter.

Where required, *Contractor* shall install strainers immediately upstream of the meter using a flanged connection. Strainers shall be the same size as the meter and from the same manufacture.

Contractor shall provide isolation valves upstream and downstream of the meter, 50 mm and larger, to allow removal of meter and strainer cases. Where required, install one valve upstream and one valve downstream of the water meter on bypasses. Provide a lockwing on the operating nut of the bypass valves.

For all compound meter installations, the *Contractor* shall provide a straight section of horizontal pipe, five pipe diameters in length, between the strainer and the upstream isolating valve or any other appurtenances (i.e. bends, elbows, reducers, etc.). A straight section of horizontal a minimum of three pipe diameters in length shall be provided after the water meter.

In the absence of a test plug on the meter case, install a testing tee with a 50 mm diameter threaded nipple and cap between the meter and the downstream isolating valve.

For meters 50 mm in diameter and larger the *Contractor* shall provide a mechanical flange adapter on the downstream side of the meter to provide flexibility for meter and strainer case removal.

Contractor must provide adequate insulation for the meter in applications where there is a possibility of the meter freezing.

Contractor shall support all meters, valves and bypasses within chambers with adjustable pipe stands. Bricks, concrete or wood blocking are not acceptable means of support.

A.12. Pipe and Appurtenances

Piping and Fittings

All piping, pipe fittings and jointing methods must comply with the latest requirements of the B.C. Plumbing Codes and AWWA Standards.

Valves

All valves are to be suitable for buried service. Valves on domestic services up to 38 mm in diameter shall be bronze ball or cylinder corporation style valves meeting AWWA C-800. Valves shall have rubber O-ring seals. Connections shall be threaded, compression type or lockwing on the operating nut and case of all

bypass valves.

Valves on domestic services 50 mm to 250 mm in diameter are to be cast iron, resilient seat, NRS gate valves to AWWA C-509 with flanged ends. Stem seal to be O-ring type. Actuation of buried valves or valves in vaults shall be by a standard 50 mm square operating nut. Valves within man entry chambers shall be operated by hand wheel. Provide a Robar style valve box over buried valves.

Fire Service valves within vaults or chambers shall be resilient seat, OS&Y or NRS gate valves to AWWA 509.

Detector Check Valves

An approved detector check valve or double detector check valves, with meter trim package are to comply with AWWA C-510. Detector check valves for fire service use must be FM and UL approved.

Flange Adapters

Mechanical Flange adapters for 38 mm to 200 mm sizes shall be to AWWA C219.

Connections between flanged fittings and Ductile Iron or Steel piping may be made with "Uniflange" adapters.

Bolts and Nuts

Bolts and nuts are to be stainless steel to ASTM F-599 or F-731 for bolts and ASTM F574 or F836 for heavy hex nuts. Rolled threads, fit and dimension to AWWA C-111.

Communication Conduit

Communication conduit is to be Schedule 40 rigid PVC with solvent welded joints. Minimum cover required over the conduit is 600 mm. Minimum radius for a 90 degree bend is 400 mm. There shall be no more than two 90 degree bends between the meter box or vault and the terminal junction box. Use 3 mm braided nylon rope for the pull string. Secure the pull string at both entrances to conduit to prevent accidental withdrawal. Cleat surface mounted conduit to the exterior of the *Building* at 750 mm intervals.

The maximum length of conduit without a pull box is 60m. Pull boxes are to be concrete, Brooks 37 style with steel lid.

Meter Boxes

The box, vault or chamber shall be pre-cast concrete to the dimensions provided in the table above. The minimum head room for man entry chambers shall be 2.0 meters.

Boxes shall have steel or iron lids capable of withstanding H-20 loading. 1200 x2000 vaults shall have two hinged galvanized steel lids providing a 880 mm x 1790 mm opening. 1760 x 3260 vaults shall have three hinged galvanized steel lids providing a 810 mm x 2590 mm opening. Lids of man entry chambers shall be 1200 mm x 1200 mm or 1500 mm x 1500 mm square split hinged galvanized steel. Vault and chamber lids shall be capable of withstanding H-20 loading. Lids for boxes, vaults and chambers in non-traffic areas shall have pre-drilled 45 mm diameter hole for remote reading receptacles.

Damp proof the exterior of all man entry chambers by applying asphalt emulsion coating to all exterior surfaces. Make construction joints watertight with an appropriate sealant.

Access lids, latches and ladders must comply with the most current requirements of the Workers' Compensation Board (WorkSafeBC).

A.13. Design, Installation and Inspection Procedure

A request for water service is initiated by application through the *City*'s Engineering Services.

The *Consulting Engineer* shall determine the size of the meter and shall select the appropriate meter type for the intended use in accordance with the *City*'s Water Meter Specifications. Plans submitted must indicate the meter size, type and chamber location. The plans shall also indicate the expected range of flows and the average expected flow for the proposed installation.

For non-typical meter installations, or for meters of 200 mm diameter and greater, the *Consulting Engineer* must provide detailed drawings giving complete details of the installation.

The *City*'s Engineering Operations Division will inspect the meter installation to ensure conformance to *City*'s Water Meter Specifications set in this Design Criteria Manual and the B.C. Plumbing Code.

Upon approval of the installation, the *City's* Engineering Operations Division will lock the bypass valve (where applicable), take the initial meter reading and activate the service.

A.14. Temporary Water Services

Temporary water services required during construction phase of a *Subdivision/Development* project must also be metered. Meters installed on temporary services are to conform to the requirements set in this Design Criteria Manual. The meter must be in place prior to the activation of the service. Temporary services may only be deactivated by *City* Operations personnel. Contact the **City of Langley Engineering Services at 604-514-2997** for removal of temporary water service and meter.

SECTION 4.0 – Rainwater Management ~~Collection and Disposal~~

4.1 General

4.1.1 The purpose of this section is to standardize the procedures for designing rainwater management systems ~~drainage collection and disposal facilities~~ in the *City*. All *Drainage Systems* shall be designed with consideration for water quality and quantity, public safety, regulatory requirements, maintenance, economic benefits and protection of the natural environment.

The presence of an existing municipal *Drainage System* does not mean, or imply, that the system has adequate capacity to receive the proposed design flows, nor does it indicate that the existing system pattern is acceptable to the *City*. Existing facilities which are undersized or inadequate to accept additional drainage must be upgraded at the *Applicant*'s expense to accommodate the appropriate flows. Alternative drainage proposals may be considered.

4.1.2 Objectives: Three goals define the *City's* objectives for integrated rainwater management:

Goal #1 – Reduce the risk of health hazards, loss of life and private and public asset ~~property~~ damage by:

- Providing flood ~~drainage~~ protection for life, livelihood and property;
- Controlling the incidence of nuisance or damage related surface ponding and flooding to within an acceptable frequency; and
- Protecting municipal infrastructure.

Goal #2 – Preserve and improve the environment by:

- Minimizing the potential rainwater impacts from *Subdivision/Development*, such as changes in groundwater regime, alteration of fish and wildlife habitat, increased pollution, increased erosion and sediment transport, and increased or decreased *Stream* flows;
- Where feasible, maintaining the shape and composition (geomorphology) of the natural *Stream* channel or ravine geometry, natural biological indicator conditions and the flow conditions (hydrogeometric regime);
- Employing *Stream* protection measures to prevent adverse hydrological and water quality impacts, for all recognized *Watercourses* within the *City*; and
- Promoting sound *Subdivision/Development* that best protects and enhances the natural environment.

Goal #3 – Conserve social and financial resources by:

- Treating rainwater as a resource rather than a waste product, ensuring that rainwater management facilities are functional and aesthetically pleasing, and integrate multi-use objectives where possible;
- Providing a system of infrastructure and services that enhances general public convenience and safety, enhances aesthetics, and allows *Subdivision/Development* to proceed according to the community plan;
- Sustaining future *Subdivision/Development*, supporting orderly and managed *Subdivision/Development* of resources and integration of land uses within the *City*;
- Using best available technologies and management practices where feasible;
- Encouraging economic design of *Drainage Systems*;
- Providing consistency and a basis of fairness for balanced and planned *Subdivision/Development* within the community.

This section includes descriptions of responsibility levels, planning needs and required design methods. To meet the integrated rainwater management goals, the *City* and land *Subdivision/Development* proponents are to follow the approach set out in this section, in the Integrated Rainwater Best Management Practices outlined in Section 5, and in supplemental stormwater management studies, where such studies have been conducted.

4.1.3 *Drainage Systems* shall consist of two components: the Minor Drainage System and the Major *Drainage System* designed into a coordinated system using integrated rainwater management principles.

4.1.4 Designers shall consult with the Engineering Services to determine what existing information may be of assistance to them.

4.2 Integrated Rainwater Management Principles

4.2.1 Integrated rainwater management is the planning, analysis and control of *Runoff* in an entire catchment area. Integrated rainwater management involves the planning and design necessary to mitigate the hydrological impacts of land, *Subdivision/Development,* or land use changes. Adverse hydrological impacts include such things as increased peak rainwater *Runoff* flows and frequency of flows, erosion, sedimentation, flooding, reduced surface *Infiltration*, reduced minimum groundwater levels and reduced *Stream* base flows, water quality deterioration and degradation of aquatic and wildlife habitats.

4.2.2 Integrated rainwater management incorporates techniques such as:

- *Drainage System* design;
- Lot grading;
- Rainwater Best Management Practices outlined in Section 5;
- Subsurface disposal;
- Detention storage;
- *Erosion and Sediment control*;
- Sediment removal; and
- Other acceptable methods to mitigate the *Runoff* impacts due to changes in land use.

4.2.3 *Consulting Engineer*s shall consult with the *City Engineer* to determine what existing *City* record information may be of assistance to them in order to properly complete the *Drainage System* design.

4.3 *Integrated Rainwater Management Plan* (*IRWMP*)

4.3.1 A comprehensive *IRWMP* is required for all land construction, including *Subdivision*/*Development,* projects, unless in the opinion of the *City Engineer*, such projects are deemed to have insignificant potential adverse impacts on downstream rainwater management systems.

4.3.2 The *IRWMP* shall include all major elements of the *Drainage System*, including sub-catchment plans, storage and flow control facilities, lot grading, (including pre and post-development ground elevations), onsite and offsite water quality and quantity control facilities, erosion and sediment control, major flood path routing, and all other appropriate information pertinent to the design as identified in Section 12.2.vi of this Design Criteria Manual.

4.3.3 The *IRWMP* of any project shall be developed in two phases at the expense of the *Applicant*. The *IRWMP* must be developed or overseen by a *Consulting Engineer* who is experienced in hydrologic cycle analysis and shall be conservative in calculation, complete with sound engineering judgment; however, the economic aspects of the design must not be overlooked. Low maintenance and operational simplicity are preferred. Criteria and proposed solutions shall be reviewed and approved by the *City Engineer*.

4.3.4 The *Applicant* will provide the *City* with the pertinent technical information, and the *City* may at its discretion undertake the hydrologic analyses by computer modeling at the *Applicant*'s cost to verify the suitability of their *Consulting Engineer*'s design.

4.3.5 *Integrated Rainwater Management Plan* – Preliminary and Detailed Design

Phase 1 of the *IRWMP* is to be completed in support of a *Subdivision/Development* application, and Phase 2 is to be completed as a condition of the *Subdivision/Development* approval or the issuance of a *Building* Permit. The requirements of Phases 1 and 2 are summarized as follows:

Phase 1: Preliminary Rainwater Management Design

Preliminary rainwater management design is required to define the *Subdivision/Development* drainage, to examine and assess different rainwater management alternatives, and to recommend an *IRWMP* that is economically and environmentally justifiable for the *Subdivision/Development*. The *IRWMP* is to be prepared according to the requirements of Sections 4.0 and 5.0 of this Design Criteria Manual, and any individual catchment studies previously undertaken by the *City*.

Phase 2: Detailed Rainwater Management Design

Unless otherwise approved by the *City Engineer*, a detailed rainwater facility design is needed to implement the *IRWMP*. The detailed design, at the minimum, shall include:

- Final sizing of rainwater management facilities, including, but not limited to, *Runoff* conveyance works, source water quality and quantity control facilities, and detention facilities;
- Final grading;
- Determination of the 5-year and 100-year *Hydraulic Grade Lines (HGL's);*
- Lot grading plans;
- Sediment and *Erosion and Sediment Control* plans;
- Water quality control plans;
- Schedule for implementation; and
- Operation and Maintenance requirements for the designed rainwater management facilities.

Summary reports of studies carried out in Phase 2 are required with the submission of detailed Engineering plans.

4.4 ***Drainage Systems***

4.4.1 Typically, all *Drainage Systems* shall be located within *Highway* or registered *SRW*s to the benefit of the *City*. The *Applicant* may be required to acquire necessary rights-of-way at the discretion of the *City Engineer*, when a *Drainage System* is to be connected to an existing, adequate *Drainage System* that is not protected as above. The cost for securing this protection shall be borne by the *Applicant*.

4.4.2 The calculation of peak design flows used for the design of the Drainage *Systems* will represent the unobstructed flow from the upstream hydrology and will not include attenuated flow from undersized culverts/bridges, retention ponds or similar facilities.

4.4.3 No surface *Runoff* shall be proposed to flow off-site over adjacent private or public lands.

4.4.4 Where flows outfall to a receiving *Watercourse*, an energy dissipater, or other *City* approved measures shall be provided to minimize/eliminate erosion.

4.4.5 Climate Change-adjusted IDF Curves

Per Metro Vancouver's study in August 2018 on the impacts of climate change on *Precipitation* and stormwater management (future IDF curves) and to account for changes in the rainfall intensities and frequencies due to the climate change (year 2050 "Moderate Climate Change Scenario"), the *City* requires *Consulting Engineers* to include a minimum increase factor of 1.20 to the *City*'s Intensity-Duration-Frequency (IDF) curves provided in Section 15.4 (SS-D01 and SS-D02).

4.4.6 *Minor Drainage System*

- The *Minor Drainage System* shall be designed to prevent flooding and property damage and minimize public inconvenience caused by storm events up to a return period of 1 in 5 years. The *Runoff* from a minor storm is referred to as the "minor flow".
- The *Minor Drainage System* consists of underground conduits, culverts, open channels, *Swales*, and storage facilities designed to carry or detain *Runoff* of frequent storm events.
- Storage facilities include underground detention tanks, detention/retention ponds, linear detention pipes, *Amended Soils*, infiltration galleries, exfiltration trenches for roof water, and other methods which reduce the rate of *Runoff* into the downstream *Drainage System* to its *Pre-development* rate.

4.4.7 *Major Drainage System*

- The *Runoff* from a major storm (1 in 100 years) is referred to as the "major flow". Unless the *Storm Sewer System* is oversized to accommodate the major flow, provisions for surface flow are required wherever cumulative *Overland Flow* in excess of 0.05 m^3/s is anticipated. Major flow routing is generally accommodated along *Roadways*, *Swales* and *Watercourses*. These designated flow paths shall be protected by Restrictive Covenants or *SRWs* and clearly identified in the *IRWMP*.
- The quantity of flow to be conveyed by the surface flow path is the total major flow less the capacity of the minor system. The design of the major flow routing shall ensure to the satisfaction of the *City Engineer* that no endangering of public safety nor substantial property damages will occur under the major flow conditions.
- Where the *Road* is used to accommodate major flow, it will be formed, graded and sufficiently depressed below the surrounding property lines to provide adequate hydraulic capacity. On *Arterial Roads*, the 100-year flow depth shall not be higher than centerline of the pavement with the maximum flow depth not to exceed 150 mm. On *Collector* and *Local Roads*, the entire *Roadway* may be used as a major flood path with the maximum flow depth not exceeding 300 mm.
  - Unless approved otherwise by the *City Engineer,* major flow routes are not permitted between property lines or on easements/*SRW* where public access may be difficult.
  - *Roadways* with curbs and gutters can be designed as wide shallow channels to convey major surface flows.
  - The water elevation at maximum ponding/flow shall be at least 0.35 meter below the lowest Minimum Building Elevation (MBE) of the adjacent *Buildings*.
  - The design of intersections shall ensure that the surface flow can continue along the designated path crossing over lateral streets. Similar considerations are required if a change of surface flow direction is required at an intersection.

4.4.8 Drainage facilities in *Floodplains* or major watercourses may require to accommodate flows with return frequencies equal or greater than 1 in 200 years. The *Consulting Engineer* shall confirm the required return frequency with the *City Engineer.*

4.5 Existing *Drainage Systems*

4.5.1 All proposed *Drainage Systems* shall drain to existing, adequate *Drainage Systems*.

4.5.2 The presence of existing *Drainage Systems* does not imply that there is adequate capacity to receive the minor or major flow from proposed *Subdivision/Development*, nor does it imply that the existing system is adequate.

4.5.3 Existing *Drainage Systems*, which are undersized or inadequate to accept additional drainage flow, shall be upgraded to accommodate the proposed flows at the *Applicant*'s expense.

4.5.4 Unless approved otherwise by the *City Engineer,* the invert of a storm sewer outlet to an existing open channel (i.e., a ditch, creek, etc.) shall be high enough to prevent backwater effect on its upstream storm sewer pipes.

4.6 Special Cases

4.6.1 No existing downstream *Storm Sewer* connection:

Under circumstances outlined in Section 5.0 (South Langley *Integrated Rainwater Management Plan*), a downstream connection may not be required if:

- An *Infiltration*-based rainwater collection system is provided on-site and/or off-site to capture runoffs from a 100-year rainfall event.
- The *Applicant* satisfies the *City Engineer* that there is no risk of groundwater contamination.

4.6.2 ~~Under special circumstances (e.g., being within floodplain, etc.),Drainage facilities in floodplains or major watercourses may require be required to accommodate flows with return period greater than 100-year return period. The *Consulting Engineer* shall confirm the required return frequency with the *City Engineer*~~.

4.7 Design Methods

4.7.1 Hydrology

- Storm sewer systems shall be designed to accommodate post-development flows using the Rational Method or the hydraulic/hydrologic modeling. All calculations pertinent to the design of the storm sewer system will be signed and sealed by the *Consulting Engineer* and submitted to the *City* for review and approval.
- For land construction, including *Subdivisions/Development*, projects where the total tributary area is 10 hectares or less, the Rational Method may be used to compute the peak *Runoff*.
- For land construction, including *Subdivisions/Development,* projects where the total tributary area is greater than 10 hectares, hydraulic/hydrologic modeling shall be used to compute the peak *Runoff*. The hydraulic/hydrologic modeling will also be used for the design of storage facilities with tributary areas greater than 10 hectares.
- The "Water Balance Model" and/or Metro Vancouver's Best Management Practice Manual, as amended, may be used to design *Source Controls*.
- The Rational Method: **Q=RAIN**

Where:

Q = Flow in m^3/s
R = *Runoff* Coefficient
A = Drainage area in hectares (ha)
I = Rainfall intensity in mm/h
N = 0.00278

Q: Is the resulting flow from the catchment or sub-catchment area

R: The *Consulting Engineer* may determine a comprehensive analysis of the developed and non-developed area of a site to determine an appropriate Comprehensive *Runoff* Coefficient and shall submit it to the *City Engineer* for acceptance prior to design. The analysis shall be based on the zoned land use defined in the adopted *Zoning Bylaw* of the *City*. All designs shall determine and include post-development unobstructed upstream flows based on the highest land use as per the *City's OCP* for the upstream lands.

Where information is not available, the following shall be used as the minimum acceptable *Runoff* coefficient:

Land Use	**Minimum *Runoff* Coefficient**
	1 in 10 Year Storm
Single Family Residential	0.65
Multi-Family Residential/Townhouses	0.75
Commercial	0.80
Industrial	0.80
Institutional	0.75
Park/Grasslands	0.2
Roof/Pavement	0.90
Woodlands	0.10

Notes:

1. For 100-year rainfall events, add 25% to the listed *Runoff* coefficients, up to a maximum coefficient of 0.95. When using the above table, no 100-year *Runoff* coefficient adjustments shall be required for single family residential dwellings with rainwater *BMPs*.
2. The soil permeability and slope of the *Watershed* will influence the value. *Runoff* coefficients increase slightly with steeper slopes and low permeable soils (e.g., clayey soil).

A: The catchment areas shall be determined using the natural contours of the land. The *Consulting Engineer* shall confirm the extent of catchment areas with the *City Engineer*. *City* data on existing contour mapping and aerial photographs may not be accurate enough for design purposes and the *Consulting Engineer* shall confirm true and accurate surface elevations and contours for their design.

I: Rainfall Intensity can be derived from Section 15.4 of this Design Criteria Manual.

N: 0.00278 - a constant

4.7.2 Time of Concentration

- The time of concentration is the time required for water to flow from the most remote part of the catchment area or *Development* area to the drainage element under design. The *City* computes the time of concentration by the following formula: (Note: actual velocities in storm sewers shall be used to calculate T_c values.)

$T_c = T_i + T_t$

Where:

T_c = time of concentration (minutes)
T_i = inlet or *Overland Flow* time (minutes)
T_t = travel time in sewers, ditches, channels or *Watercourses* (minutes)

- A composite value for T_c is calculated where the type of flow along the longest flow path varies or the slope changes.

- Inlet Time for Developed Areas
  - **Inlet or *Overland Flow* Time (T_i)**

    a) Typical inlet times for *Urban Area*s are as follow:

Single Family *Parcel*	10 minutes
Multi-Family *Parcel*	8 minutes
Commercial/*Industrial*/Institutional	5 minutes

b) The inlet time for larger areas shall be calculated using the following method:

$$T_i = \frac{3.26(1.1 - C)L^{0.5}}{S^{0.33}}$$

Where:

T_i = inlet time in minutes,

C = *Runoff* coefficient

L = travel distance in m (maximum length = 300 m)

S = slope of travel path (%)

  - **Travel Time (T_t)**

    The travel time in sewers, ditches, conveyance channels or *Watercourses* can be estimated using the Modified Manning formula:

$$T_t = \frac{Ln}{60R^{0.667}S^{0.5}}$$

Where:
T_t = travel time in minutes
L = Length of flow path in m
n = Manning roughness coefficient
0.060 Natural channels
0.040 Excavated ditches
0.013 Pipe and concrete lined channels

R = Hydraulic radius (area/wetted perimeter) in m
S = slope in m/m

4.7.3 Presentations of Rational Method Calculations

- The designer shall use the *City*'s calculation table (Storm Sewer Design Table, SS-D03), provided in Section 15.4 of this Design Criteria Manual to tabulate all Rational Method calculations for submission. An electronic version of the calculation table in Microsoft Excel format is available upon request. The designer will submit their unlocked electronic file in its original version showing the formulas along with appropriate plans and other relevant information as directed by the *City Engineer*.
- When hydraulic/hydrologic modeling is required, the *City* will provide electronic copies of the design storm hyetographs in Microsoft Excel version upon request.

4.8 Pipe Design

4.8.1 Hydraulics

The *Consulting Engineer* shall tabulate the calculations on the "Storm Sewer Design Table" (SS-D03), for submission along with the appropriate plans and other relevant information.

- Hydraulics shall be calculated using Manning's Formula:

$$Q = \frac{A\,R^{0.667}\,S^{0.5}}{n}$$

Where:

Q = flow capacity (m^3/s)
A = cross-sectional area (m^2)
R = hydraulic radius (m)
S = slope of *Hydraulic Grade line* (m/m)
n = Manning's coefficient of roughness
0.013 for concrete pipes
0.011 for Polyvinyl Chloride PVC - with smooth inner walls
0.060 for natural channel/creeks
0.040 for excavated ditches
0.024 for existing CMP pipes and culverts
0.020 for paved invert CMP pipes and culverts.

Note: Asbestos cement pipes, clay pipes and corrugated metal pipes are not acceptable for new/permanent storm sewer construction.

  - Alternatively, the *Consulting Engineer* may use Innovyze InfoSWMM hydrodynamic modeling software to determine pipe or channel capacities. Other programs may be considered if approved by the *City Engineer*.

- Downsizing of storm sewers on steeper grades is not permitted for mains 600 mm diameter or less. Downsizing of a maximum of two nominal pipe sizes for mains larger than 600 mm diameter may be considered at the discretion of the *City Engineer*.
- Velocity
  - Minimum = 0.6 m/sec, flowing full or half full.

(Velocity calculation spreadsheet with embedded formulas for partial flows is available at the *City* upon request)

- Maximum = there is no maximum velocity. However, if the design velocity exceeds 2.5 m/s and super-critical flow occurs, provisions for structural stability of the main and durability of the pipe shall be addressed by the *Consulting Engineer*.

- Despite the above, where the slope of the proposed main exceeds 15%, scouring protection and anchor blocking shall be incorporated. A Geotechnical Engineer shall be required to provide design details, monitor construction and provide construction reports at the discretion of the *City Engineer*.
- Where drainage discharge enters an open channel provisions for energy dissipation shall be provided to prevent scour.

4.8.2 Strength - "Class"

- All concrete pipes shall be reinforced. Where cover on any main exceeds 2.5 m, the *Consulting Engineer* shall submit calculations proving the class of pipe specified is adequate for the expected loading.

4.8.3 Pipe Joints

- All *Storm Sewer Systems* shall be designed for closed joint construction unless otherwise approved by the *City Engineer*.

4.9 Hydraulic Modeling - Drainage

4.9.1 Hydraulic analysis of a creek system for flood control related works shall be done under a 200-year, 5-day winter design storms. The hyetographs of this design storm (in MS. Excel format) is available at the Engineering Services upon request.

4.9.2 the *City*'s *Storm Sewer System*, with catchments larger than 10 hectares, shall be modeled with hydrodynamic modeling software such as Innovyze InfoSWMM. Other programs may be considered if approved by the *City Engineer*.

- The model used for sewer infrastructure sizing shall be based on the post-development conditions and under the *City*'s *OCP* land-use scenario, using the most current planning information. Conservative parameters shall be selected if calibration data is not available.
- *Infiltration* modeling methods such as Green-Ampt or Horton's shall be used in urban *Watershed*s. However, these methods require careful selection of parameters that are specific to the soils of the area being considered.
- Efforts shall be made to calibrate and validate the results of these analyses using observed rainfall/flow data even from other similar *Watershed*s prior to detailed design. As a minimum, sensitivity of the model predictions with the variation in key parameters values shall be tested and the findings used to develop realistic and conservative models of the system being evaluated.
- Where information is not available, use the impervious fractions shown in the following Table for analysis. In areas of existing *Subdivision/Development* or where more detailed information is available, the *Consulting Engineer* shall verify that the values shown are representative of the true conditions.

Land Use (For Hydraulic Modeling Purposes)	Total *Imperviousness* (Hydraulic Modeling)
Single Family Residential	0.70
Compact/Multi-Family residential	0.80
Commercial	0.85
Industrial	0.85
Institutional	0.80
Park/Grasslands	0.30
Woodlands	0.15

- For evaluating the performance of storage facilities over long winter wet weather periods, continuous modeling programs such as Innovyze InfoSWMM, and Water Balance Model are appropriate.
- It is incumbent upon the *Consulting Engineer* to obtain the appropriate rainfall data for the analysis and receive approval from the *City Engineer* of the system and process to use.
- Design Storms:
  - For peak flow analysis, single event design storms with duration of 1 hour, 2 hours, 6 hours, 12 hours and 24 hours will be used. These storm events will be used in the analysis to determine which produces the maximum peak flow. Maximum peak flows from storms with the shorter duration will usually govern in basins that have higher percentages of directly connected impervious surfaces. Longer duration storms will usually produce higher peak flows in basins where the percentage of directly connected impervious surface is moderate to low.
  - For volume analysis (retention ponds, *Infiltration* basins, etc.), single event design storms with duration of 12 hours and 24 hours will be used.
  - The need for more analysis to identify the *City*'s design storm distributions has been identified. Until the results of such work are available, the 1 and 2-hour duration storms shall be based on the 30 percent British Columbia Coast AES distribution and the 6, and 12-hour duration storms shall use the 50 percent curve. SCS Type 1A distribution shall be used for 24-hour storm events. The *City* will provide electronic copies of the design storm hyetographs upon request. Alternatively, the *Consulting Engineer* may use other synthetic design storm models, if approved by the *City Engineer*.

Rainfall Duration (hour)	Design Strom Hyetograph
1	AES 30% Percentile Distribution
2	AES 30% Percentile Distribution
6	AES 50% Percentile Distribution
12	AES 50% Percentile Distribution
24	SCS Type 1A

4.9.3 Presentation of Modeling Results

The *Consulting Engineer* shall submit a report including the following:

- Name and version of modeling program;

- All design parameters and specific simulation assumptions used;
- Design storms used, to be clearly documented and plotted;
- Peak flows and total *Runoff* volumes;
- Summary of peak flows and inflow/outflow *Hydrograph*s of storage facilities;
- Schematic diagram of the model;
- Drainage map showing the catchment and sub-catchment boundaries, slopes, the *Drainage System*;
- A plan showing the specific land uses modeled for each *Subdivision/Development*, soil conditions, etc.;
- The function layout and sizing of any flow control/diversion structure;
- The tabular/graphical plots of inflow and outflow *Hydrograph*s;
- Tables summarizing the input and output values; and
- Electronic copies of the computer model and the related spreadsheets used in input/output data preparation.

4.9.4 When the *City Engineer* is not requiring storm sewer modeling, the *Consulting Engineer* shall instead demonstrate that all downstream storm sewer infrastructures for a distance of up to 500 m are capable of handling the projected 5-year *Runoff* flows created by the proposed *Subdivision/Development* within the catchment area and under the ultimate land use *(OCP*) conditions.

4.10 Storm Sewers and Appurtenances

4.10.1 Minimum Pipe Sizes

- Mains shall not be < 250 mm diameter;
- Mains with Catch Basin (CB) connections shall not be < 300 mm diameter;
- Side inlet CB leads shall be 200 mm diameter;
- CB leads shall be 150 mm diameter; and
- Double CB leads shall be 250 mm diameter. Double CB's shall not be connected directly together, but rather one basin will be wyed into the lead of the other by a 200 mm diameter off a 250 mm wye.

4.10.2 Minimum Grades

- Storm sewer (mains) shall not have a slope < 0.05%.

4.10.3 Depth

- The depth at crown of proposed *Drainage Systems* shall be enough to provide gravity service connections for all *Parcel*s abutting the main. The elevation at the upstream terminus of any main shall be sufficient to service all upstream tributary lands beyond the *Subdivision/Development* and within the approved design catchment area.
- All pipes shall have at least 1.0 m cover. Where this is not achievable the designer shall include specific details of pipe material, backfill and bedding for loading purposes and frost protection.

4.10.4 Separation from Other Utilities

- The horizontal clearance between storm and sanitary sewer pipes shall be no less than 1.0 m and the horizontal clearance between manholes shall be no less than 0.3 m.
- Storm and sanitary sewers may be installed in a common trench, provided that the design has taken into account interference with service connections, stability of the benched portion of the ditch, conflict with manholes, and in no case shall the horizontal clearance between sewer pipes, or between manholes and sewer pipes, be less than 0.3 m.
- For separation from watermains see section 3.14.
- When a new utility runs under an AC storm pipe, a segment of that AC pipe shall be replaced with a *City*-approved pipe material and extend 1.0 m into each side of the trench cut.

4.10.5 Manholes

- Manholes are required:
  - Every 125 m for pipes ≤ to 900 mm diameter;
  - Every 150 m for pipes > 900 mm diameter;
  - Change of pipe size, line or grade that exceed ½ the maximum joint deflection recommended by the manufacturer or where the radius of curvilinear alignment is less than 30 meters. Only one horizontal or one vertical defined curve/grade change is permitted between two manholes;
  - At the upstream terminus of all mains greater than or equal to 300 mm;
  - At all intersecting sewers.
- In manholes the crown of the inlet pipe shall be at or above the crown of the outlet pipe;
- First manholes, where ditches discharge to storm sewers, shall include a minimum 600 mm sump;
- The drop through all manholes shall be 30 mm unless otherwise approved by the *City Engineer*;
- All manholes with or without sumps shall be accessible for maintenance.
- Standard Manhole sizes

Diameter of Largest Pipe Entering Manhole (mm)	Diameter of Manhole (mm ID)
450 and less	1050
525 to 600	1200
675 to 750	1350
900 to 1050	1500
1200 and larger	Riser Manhole

4.10.6 Lawn Basins

Lawn Basin leads shall have a minimum size of 150 mm and a minimum slope of 2%. The *City Engineer* may approve a minimum of 1.5% slope if it is demonstrated to the satisfaction of the *City Engineer*, the minimum 2% slope is not achievable due to site constraints.

4.10.7 Catch basins or (CB)

- Locations:

- At regular intervals along *Roadways;* and
- At intersections and curb returns wherever practical. Rainwater shall be drained into CB's on the upstream side of curb returns and wheel chair letdowns.
- Double CB's to be used at any trapped low or end of curb, points.

- Design:
  - The capacity of a single catch basin can be calculated by the orifice equation:

    $Q = 0.67\ C\ A\ (2\ g\ h)^{0.5}$

    Where

    Q = inlet capacity (m^3 /s)

    0.67 = clogging factor

    C = orifice coefficient (0.8)

    A = open area (0.068 m^2 for Dobney B-23 grate)

    g = gravitational acceleration (9.81 m/s^2)

    h = depth of ponding (m)

  - CB's shall collect up to
    - A maximum of 400 m^2 of pavement *Runoff* per CB where gutter grades are less than or equal to 3%.
    - A maximum of 350 m^2 of pavement *Runoff* where gutter grades exceed 3%.
  - The *Consulting Engineer* shall specify the appropriate type of catch basin to be used in *Swales* to the satisfaction of the *City Engineer*.
  - CB's on private property shall be fitted with trapping hoods.

4.10.8 Service Connections

- See Sections G and D of the standard drawings (Section 15.4) in this Design Criteria Manual for typical location.
- Diameter
  - Minimum 150 mm for single family residential.
  - Minimum 200 mm for all other applications.
- Minimum slope from main to Property Line shall be 2%;
- All *Parcel*s abutting a proposed *Drainage System* shall be provided a service connection except where existing service from another *Drainage System* is adequate and acceptable to the *City Engineer*.
- The *Drainage System* and all service connections shall be at a depth to permit gravity flow from existing or proposed *Building*(s) to the main.
- Typically, connections shall be located on the low side of the *Parcel*.
- Typically, only one service connection per *Parcel* is permitted.

- When infilling an existing ditch, all existing service connections from existing properties to the ditch or where any type of drainage is provided by the existing ditch, provision shall be made to maintain or replace the service.

4.10.9 Inlet/Outlet Structures

- Sediment traps/sumps shall be installed at the upstream of all storm sewer inlet structures.
- All storm mains require either an appropriately sized precast headwall or a properly engineered headwall structure.
  - <200 mm – Mini Headwall Lot Outfall Structure as supplied by the Langley Concrete Group or *City* approved equivalent.
  - 200 mm to 450 mm – Type 2 Headwall complete with grillage and railing as supplied by the Langley Concrete Group or *City* approved equivalent.
  - >450 mm – Precast concrete headwall complete with grillage and railings or engineered green wall complete with grillage and railings/fencing.
- All mains discharging to open ditches, creeks or *Watercourses* require riprap protection for a minimum of 3 m downstream of the apron of the outlet structure or headwall. Additional riprap may be required at the discretion of the *City Engineer.*
- All open ditches, creeks or *Watercourses* discharging to storm pipes require installation of Type I Ditch Inlet Structure as supplied by the Langley Concrete Group or *City* approved equivalent.
- Where the velocity of flow in the main is ≥ 1 m/sec, an outlet structure is required, complete with energy dissipating baffles.
- Structures exceeding 1 m in height and 2 m in width shall include a railing.

4.10.10 Culverts

- Minimum diameter = 450 mm or as directed by the *City Engineer*.

  Minimum slope = 0.01%
- The minimum diameter shall be greater than or equal to the depth of headwater at the inlet, unless otherwise approved the *City Engineer*.
- Culverts located in natural *Watercourses* or all culverts crossing *Roadways* shall be designed to convey the flow resulting from a minimum 100-year event. The *Consulting Engineer* shall provide calculations and recommendations if the culvert will be operating under inlet or outlet control conditions.
- Reinforced concrete or Type S corrugated HDPE culverts are preferred for general uses. The *City* does not accept CMP or PVC culverts. Other materials may be considered at the discretion of the *City Engineer*.
- Unless otherwise approved by the *City Engineer*, the minimum depth of cover is 1.0 m subject to adequate pipe loading design parameters.
- Inlet and outlet structures are required on all culverts designed to convey the major flow. Energy dissipation and scouring protection or *Erosion and Sediment Control* shall be included in the design of any culvert installation.
- Culverts shall be designed to restrict entry by small animals such as beavers and where applicable, to allow fish passage.
  - Culvert installations are subject to provincial and federal environmental legislation.

4.10.11 Ditches

- Unless otherwise approved by the *City Engineer*, open ditches for drainage are not acceptable for permanent servicing of land within the *City*. They may be considered only for special interim uses.

4.11 Storm Sewer Connections

4.11.1 Inspection Chambers are required for all storm connections to *City* mains.

4.11.2 An Inspection Chamber shall be installed at the property line (PL) or *SRW* line as per supplementary standard drawings in this Design Criteria Manual.

4.11.3 Only one gravity connection per property to the municipal storm Drainage System is permitted.

4.11.4 All services shall enter the main at the top of the pipe.

4.11.5 Connection to mains shall be made in accordance with the *MMCD* standard drawings.

4.12 French Drains

4.12.1 French drains shall be used where the presence of ground water may affect the stability of the existing or proposed *Road* structure. French drains are required where indicated by investigation and soils report(s) prepared by a qualified Geotechnical Engineer and at the discretion of the *City Engineer*.

4.13 Swales

4.13.1 *Swales* may be used:

- In conjunction with lot grading to provide rear, front and side yard drainage as required or directed by the *City Engineer* and secured and protected by an *SRW*; and
- To convey overland Major Flows if approved by the *City Engineer.*

4.14 Major Flow Path *Swales*

4.14.1 Major flow path *swales* shall be:

- Designed for the capacity of the expected flows;
- Designed with scour protection and energy dissipation;
- Secured and protected by an *SRW*; and
- Designed with suitable access for continuous maintenance and inspection by the *City*.

4.15 Roadside Drainage *Swales*

4.15.1 Roadside drainage *Swales* shall be connected to an adequate *Drainage System* with an appropriate connection per standards and specifications and shall be:

- Used where the *Road* drainage is minimal and can be contained safely and practically in a *Swale*;
- Maximum 2.0 m wide;
- Maximum 0.3 m deep;
- Designed with a maximum velocity of 1 m/s; and
- Lined with sod on minimum 150 mm topsoil or erosion blanket or approved alternative.

4.16 *Curvilinear Sewers*

4.16.1 At the discretion of the *City Engineer*, *Curvilinear Sewers* may be permitted where:

- The main is on a constant simple curve;
- The minimum radius is achieved by deflecting the pipe joint no more than ½ the deflection recommended by the manufacturer;
- All joints are located by survey for record drawing information; and
- Minimum velocities and minimum grades are maintained.

4.17 Location/Corridors

4.17.1 Mains located within the *Highway SRW* shall substantially conform to the standard typical cross-sections.

4.17.2 Where a *Drainage System* is designed to convey drainage across private property, it shall be secured within an *SRW*. The depth of a main shall determine the width of the *SRW* as follows:

Depth of Main (ground to invert)	Width of SRW with 1 pipe	Width of SRW with 2 pipes
≤ 3 m	3 m	4.5 m
> 3 m & ≤ 4 m	4 m	5.5 m
> 4 m	6 m	8.0 m

Additional *SRW* width may be required by the *City Engineer* based on a site-specific analysis.

4.18 Natural *Watercourses*

4.18.1 Works in set-back areas and discharge to creeks, *Streams* and *Watercourse* may be subject to federal and provincial regulatory requirements. The *Applicant* shall retain the services of a *Qualified Environmental Professional* (*QEP*) to complete required studies and obtain any necessary permits and approvals prior to construction.

SECTION 5.0 – Integrated Rainwater Best Management Practices

5.1 General

The goal of the *City* in managing rainwater is to provide sustainable hydrologic systems that mimic natural systems, protect water resources, and minimize downstream flooding and erosion.

5.2 Rainwater Control

5.2.1 Post-development rainwater *Runoff* from all land construction, including *Subdivision/Development,* projects is required to be controlled to its *Pre-development* rate to prevent or mitigate flooding and environmental impacts. These controls may be in the form of:

- Integrated rainwater management that is designed to increase onsite *Infiltration* to supplement or reduce the need for detention storage, and
- Detention storage in surface ponds or underground pipes, chambers or tanks.

5.2.2 The *City* encourages innovative approaches to achieving control of post-development *Runoff*. Groundwater recharge achieved through rain gardens, *Bioswale*s and *Infiltration* galleries provide positive environmental benefits. Prior to proceeding with innovative approaches to designs, *Consulting Engineer*s shall consult their ideas with the *City Engineer* to verify whether they are acceptable to the *City*. The *City Engineer* may require hydrological, geotechnical, or other reports to consider the suitability of the proposed approaches.

5.3 Integrated Rainwater Management

5.3.1 Best Management Practices (*BMPs*)

BMPs are designed to reduce the flow rates or volumes of rainwater runoff, reduce the level of pollutants contained in that runoff, and convey rainwater runoff. *BMPs* include structural rainwater facilities that provide long-term management of onsite rainwater.

Design of *BMPs* shall be in accordance with the guidelines set forth in the Metro Vancouver*'s* "Region-wide stormwater guidelines" and "Stormwater *Source Control* Design Guidelines" (MV Guidelines - http://www.metrovancouver.org/services/liquid-waste/drainage/stormwater-management/resources/Pages/default.aspx).

The following restrictions, substitutions and clarifications to the MV Guidelines shall apply:

- Rainwater *BMPs* shall not be installed prior to *Building* Permit stage for all *Subdivisions/Developments* in the *City*.
  - *Amended Soils*
    - *Amended soils* are to be provided by both *Applicant*s and builders.
    - As part of the *Subdivision/Development* process, a minimum depth of 450 mm of *Amended soil* shall be placed on all *Boulevards*, planted medians and other vegetated areas within municipal *Road* allowances.
    - As part of the building process, builders shall place a minimum depth of 450 mm of *Amended soil* over the entire footprint of the lot not covered by the *Building* and driveway areas.
    - *Amended soils* are native or non-native soils that have had their soil properties (texture, depth, porosity, and nutrients) amended to promote improved rainwater *Infiltration* and retention through the addition of organic amendments and

manipulation of soil *Infiltration* properties. *Amended soils* are to contain at least 10% organic matter on a dry weight basis. Soil pH shall match the pH of the original topsoil. Compost used to amend soils must have organic matter content between 35% and 65% with a carbon to nitrogen ration below 25:1. Maximum compost particle size is 74.9 mm with a recommended gradation of:

- 100% passing 75 mm
- 90% passing 25 mm
- 65% passing 19 mm
- 25% passing 6.4 mm

- Upon submitting a Professional Geotechnical Engineer's report showing that the *Infiltration* rate of the native soil is equal or higher than the infiltration rate of the required *Amended Soil*, as specified above, the *City Engineer* may approve using the native soil at South Langley area as an acceptable substitute for the required *Amended Soil* (see Section 15 for the South Langley area boundaries),
- Disturbance of existing permeable soils shall be kept to a minimum. Placement of *Amended Soil*s must be done over sub grade soils that have been loosened to a minimum depth of 100 mm below the top of the subsoil by scarification or tilling.
- The original topsoil shall be retained on a site wherever possible and amended as necessary to meet the above standards.
- A Professional Geotechnical Engineer, a Geoscientist or an Agrologist shall certify that the properties of the *Amended Soil* and the depth of soil placed, and method of placement all meet the standards of this section prior to a *Final Approval* being granted for the dwelling.

  The certification shall be in written form including *BC Building Code* letters of assurance.

- Downspouts:
  - Rainwater roof leaders in all single family residential dwelling *Subdivisions* shall discharge to a splash pad and drain its unobstructed flows to the *Amended Soil* with lawn basin.
    - A 2 m wide by 450 mm deep swath of *Amended Soil* is to be placed along the flow path.
- Pervious pavements:
  - Pervious pavements shall be used in all single family residential *Subdivisions* for driveways and all other onsite paved areas.
    - The use of Porous Asphalt (PA) is encouraged for paved areas on private properties or parking lots in all other types of *Developments* (e.g., multifamily, *Commercial, etc.*).
  - PA paving shall be designed by a well-qualified company with a proven record of successfully designing/maintaining PA pavements. Where geotextile filter cloth is recommended or required, it shall be a non-woven geotextile exhibiting the following specific characteristics:
    - Hydraulic conductivity between 4,500 and 6,500 litres per minute per square meter.
    - Apparent opening size of 0.212 mm (or US sieve # 70).

- Soak-away manholes and other subsurface *Infiltration* systems are prohibited for use in locations where the system penetrates subsurface impervious layers to reach underlying aquifers.

5.3.2 Integrated Rainwater Management Performance Targets

The principal goals for the design of rainwater management facilities in the *City* are to implement best management practices (BMP's) that promote interflow and baseflow increase, peak flow control, and *Runoff* quality improvements where applicable.

The *Applicant's Consulting Engineer* shall:

- Submit calculations showing how the proposed rainwater best management practices (BMPs) will meet the specified performance targets.
- Certify that the required rainwater BMP targets outlined in this section have been met prior to a *Final Approval* being granted for the *Subdivision/Development*.

5.3.3 Rainwater Management Plan: Site and Lot Grading

- Lot grading is considered an "essential service" and is required prior to the issuance of *Building* Permits.
- To facilitate *Building* Permit issuance, and to provide the builders with accurate site information, <u>the approval of the lot grading record drawings is required:</u>
  - During *IRWMP* drawing submission to the Engineering Services; <u>and</u>
  - Prior to issuance of the *Building* Permits.
- *Development*s shall incorporate the following site/lot grading techniques:
  - Each lot shall be graded to drain into a *City Drainage System* or a natural drainage path independent of adjacent lots where possible. Minimum lot grades to be 1%. Lot grading is to be uniform and consistent.
  - Areas around *Buildings* (or proposed *Building* sites) shall be graded away from the (proposed) foundations to prevent flooding.
  - Lots lower than adjacent *Roadways* should be avoided where possible or acceptable rainwater management techniques must be incorporated to direct the *Runoff* to an existing or proposed *Drainage System*. Proper flood proofing is required at the low points of *Roadways*.
  - Existing or proposed *Buildings* shall be sited above the *HGL* of the *Major Drainage System*. The Designer shall note any existing *MBE*.
  - Unless approved otherwise by the *City Engineer*, lots will not be permitted to divert rainwater *Runoff* from their *Pre-development* directions and discharge into any other *Storm Sewer System*, including but not limited to, natural *Watercourse*, park or green belt areas.

5.4 <u>Water Quality Performance Target</u>

5.4.1 Water quality degradation factors including the reduction of dissolved oxygen, increased levels of sediment, hydrocarbons, and other various pollutants and fluctuations in temperature shall be mitigated by the design and installation of any apparatus which is intended to reduce, prevent,

eliminate or otherwise control the release or impacts of these factors on or into any existing or downstream *Drainage System*.

- The *Consulting Engineer* shall:
  - Follow the requirements outlined in the *City*'s Watercourse Protection Bylaw, as amended.
  - Employ sound professional judgment in the prevention of point source pollution and reduction of non-point source pollution, or a combination of both on any *Subdivision/Development* site.
- For all types of *Developments* (Residential, Institutional, *Commercial*, and *Industrial*):
  - The *Consulting Engineer* shall, at the minimum, include one of the following measures to improve rainwater *Runoff* quality:
    - Draining driveway and other paved area *Runoff* to a permeable surface with vegetation and not directly to the street and/or storm sewer; or
    - Using porous asphalt paving.
- For *Commercial* and *Industrial* Lands:
  - Any substance that could create a negative impact on the *City*'s *Storm Sewer System* is a prohibited substance and cannot enter the system.
  - The *Consulting Engineer* shall include the required measures to prevent oil, gasoline, and/or any substance(s) that emits an odour entering the *City*'s *Storm Sewer System*.
  - Those *Commercial* and *Industrial* properties that, in the *City Engineer*'s opinion, are likely to have oil/gasoline in their onsite stormwater *Runoff* shall install onsite oil interceptor tanks upstream of their underground detention facilities.
    - The size and type of the oil interceptor tank shall be specified by a *Consulting Engineer* with related expertise and past experience.
    - The oil interceptor tank shall be standard concrete tank manufactured by Langley Concrete Group, or *City* approved equivalent.
    - The oil interceptor tanks' concrete lids shall be reinforced for H20 loading.

5.5 Erosion and Sediment Control (ESC)

5.5.1 All land construction projects, including *Subdivision*/*Development* projects, shall be undertaken and completed in such a way that prevents erosion by wind or rainfall, prevents sedimentation of the *Storm Sewer System,* and is compliant with the requirements set in:

- This Design Criteria Manual;
- The *City*'s Watercourse Protection Bylaw, as amended from time to time;
- DFO guidelines, as outlined in its "Land Development Guidelines for the Protection of Aquatic Habitat" publication; and
- All other related provincial and federal statutes.

~~Inspecting, Monitoring, and Reporting:~~

~~Unless otherwise approved by the *City Engineer*:~~

- ~~All applications for proposed construction on land shall retain a Professional Engineer with~~

~~expertise in *ESC* or a Certified Professional in ESC, acceptable to the *City Engineer*, to prepare and submit to the *City Engineer* *ESC* plans for all phases of *Subdivision/Development* and construction until *Substantial Completion* is in place; and~~

- ~~All applications for proposed construction on land (excluding single family residential) shall retain a *QEP* to supervise implementation of the *ESC* plans.~~
  - ~~The *QEP* shall submit Form F-5 (Section 13.0) to Engineering Services prior to the commencement of the construction work.~~

5.5.2 It is the responsibility of the *Applicant* to ensure that all *ESC* facilities described in the *ESC* Plan are constructed, implemented, installed and maintained for the duration of construction until *Substantial Completion*.

5.5.3 A gravel site access pad as shown in section G of the Supplemental Specification Drawings of Section 15.4 must be constructed on each Lot to prevent soil from sticking to tires and being tracked off site onto *Roads*.

5.5.4 Various best management practices can be implemented to control erosion and sediment and it is the *Applicant's* responsibility to implement applicable controls. These controls may include, but are not limited to:

- Clear only the areas necessary for the construction project and leave existing vegetation undisturbed, where possible;
- Remove sediment from streets immediately and plan for regular/daily street sweeping;
- Protect the perimeter of the construction site by maintaining existing vegetation, erecting silt fence, applying gravel, a compost berm or *Swale*;
- Divert clean water from upslope areas away from site;
- Keep exposed soils rough, cover with straw, wood chips, plastic, grass seed;
- Unless deemed unnecessary by the *City Engineer*, a sediment settling pond shall be designed, installed and maintained according to the Land Development Guidelines for the Protection of Aquatic Habitat to prevent sediment-laden water from accessing the *Storm Sewer System* and pump sediment laden water to:
  - Undisturbed areas where water can be filtered or infiltrate to ground; or
  - Discharge off-site, where infiltrating to ground is not feasible.
- Install inlet protection measures (catch basin inserts, fibre rolls, filter cloth, silt fence, gravel bags etc.) on all nearby storm sewer inlets (catch basins, lawn basins, manholes etc.):
  - Catch basin inserts shall be:
    - Installed prior to clearing and grading activities, or upon placement of a new catch basin;
    - Clean or replaced prior to release of *Building* Permits;
  - Catch basin sediment:
    - Shall be removed from the unit when it becomes half full;
    - Removal shall be accompanied by removing the insert, emptying and re-inserting it into the catch basin or replace as needed; and
    - Material shall be disposed of where it cannot be re-introduced to the system.

- Completely cover temporary stockpiles or spoiled material with polyethylene or tarps and surround with silt fence;
- Divert runoff away from cleared/active areas by use of low berms;
- Keep all sand, gravel, spoiled material and concrete mix off of the paved surfaces;
- Regularly sweep roads;
- Regularly inspect and maintain all controls; and
- Re-vegetate the construction/*Development* site as soon as possible after the construction is complete.

~~5.5.5 The *City Engineer* may issue a "Notice to Comply" specifying conditions that must be implemented to ensure compliance with terms and conditions of all relevant *City* bylaws and other statutes.~~

~~5.5.6 If the *Owner/Developer* fails to comply with a Notice to Comply, the *City* may utilize all or part of the *Security Deposit*, enter upon the construction site and take whatever works or action the *City* considers necessary to carry out remedial works, or other actions necessary to protect the *Drainage System*. If the amount of *Security Deposit* is insufficient for such purposes, the *Owner/Developer* shall forthwith pay the *City* immediately upon receipt of the *City's* invoice for the work, failing which, the amount of such costs may be added to the property taxes for the *Subdivision/Development* site and collected in the same manner and with the same remedies as property taxes.~~

5.6 Peak Flow Control Performance Target

5.6.1 All post-development flow analyses shall include the climate change effect as outlined in this Design Criteria Manual.

5.6.2 Post-development minor flows generated by a 5-year rainfall event shall be controlled and released at a 5-year pre-development flow rate.

5.6.3 Where *Overland Flow* routes are adequate to convey safely the entire catchment major flows generated from a 100-year 24-hour rainfall event, storage facilities to detain a 100-year post-development run-off may not be required.

5.6.4 Where existing *Storm Sewer System* or *Overland Flow* routes are inadequate to convey safely major flows generated from a 100-year 24-hour rainfall event, the *Consulting Engineer* shall design the storage facility to detain a 24-hour, 100-year rainfall event and discharge it at the 5-year *Pre-development* peak flow rate.

5.6.5 Major flow control at single family *Subdivisions* shall depend on the site's rainwater *BMPs* (that include *Amended Soil*, Porous Asphalt (PA) driveway, and disconnected downspouts), a sediment trap, and an onsite storage manhole with grated lid to collect onsite excess rainfall *Runoff* and discharge them to the *City*'s downstream storm sewer pipes at a 5-year pre-development rate. Section 15.4 of this Design Criteria Manual provides the related drawings.

- For 350 m^2 subdivided lots, the *Applicant* shall install an 1800 mm storage manhole.
- For lots with 560 m^2 of subdivided area or less, the *Applicant* shall install a 2,400 mm storage manhole.
  - The *City Engineer* may require onsite storage facilities for lots with areas greater than 560 m^2.

- Storage manholes shall use grated manhole lids as their emergency overflow to discharge excess *Runoff* due to infrequent rainfall events to the designated flow path through the *Amended Soil*.

- The *Owner* of the subdivided land shall sign a Restrictive Covenant on Title agreeing to keep the site's rainwater *BMPs intact* at anytime in the future and maintain regularly to function as designed.

5.6.6 Major flow control targets for all other types of *Development applications* shall be in the form of storage in onsite underground detention facilities, communal wet ponds, or underground storage pipes.

5.6.7 Detention Facility Design Requirements

The following criteria are to minimize the impact of a *Development* on the environment and the downstream conveyance system;

- Detention/storage facilities shall be sized to detain the post-development *Runoff* generated by rainfall events up to a 100-year 24-hour storm event from the contributing developed area and discharge it at the allowable release rate. *Consulting Engineers* shall include the climate change effect on runoff inflow rates, when calculating storage volume of a detention facility.

- Unless otherwise approved by the *City Engineer*, a minimum safety factor of **1.2** shall be applied to the calculated storage volume if the Modified Rational Method is used to calculate storage.

- The allowable release rate shall be limited to that of the *Pre-development* peak flow rate corresponding to the 5-year rainfall event or as otherwise directed by the *City Engineer*. The climate change effect shall not be included when calculating a 5-year *pre-development* discharge rate from a detention facility's outlet structure. This is due to the fact that the majority of the *City*'s storm sewer pipes were designed in the past when climate change was not a design factor.

  - The storm duration used for the release rate shall be equal to the estimated *Pre-development* time of concentration (T_c).

  - Unless otherwise approved by the *City Engineer, the r*elease rate shall be based on a minimum orifice size of 50 mm (due to operational concerns about outlet plugging).

- Following DFO's guidelines, the post-development *Runoff* release rates from detention facilities at areas that would likely impact fish and fish habitat (i.e., area within 500 m of a creek) shall match 6-month (i.e., 72% of a 2-year event), 2-year, and 5-year *Pre-development* rates.

- A provision to accommodate a rapid drawdown of the detention facility within two hours shall be included in the design for emergency purposes or to restore the available storage to accommodate subsequent storm events. The overflow shall be directed to the major flow path.

  The provisions to accommodate higher discharges will involve oversizing the fixed openings and sewers connected to control structure. Adjustable mechanism such as slide gates or removable orifice plates can be used to regulate the design release rates. The extent of the oversizing will depend on the capacity of the downstream *Drainage System*.

  The design of inlet/outlet structures shall consider flow energy dissipation and Erosion and Sediment Control. Safety grates are required over all inlet/outlet openings larger than 525

mm in diameter. Locks for access hatches are required to prevent unauthorized entrance to the structure.

5.6.8 Emergency Overflow

An emergency overflow spillway with capacity to convey the 100-year and larger rainwater *Runoff* flows is required for all storage facilities. The spillway surface shall be finished with erosion resistant materials such as concrete, turf stone or other approved equal. The maximum spillway slope is 4 (horizontal) to 1 (vertical). The design of the spillway and/or overflow shall consider the possibility of blockages in the outlet structure and the consequences of extreme storm events.

5.6.9 Underground Detention Facility Design Requirements

- *Applicant*s may build underground storage facilities only on private properties, unless otherwise approved by the *City Engineer*. These underground detention facilities shall be designed to allow for regular cleaning and maintenance, or designed to minimize the need for cleaning through the use of *Runoff* screening and filtering devices. These facilities shall be designed for a life expectancy of 75 years.
- The *Consulting Engineer* shall demonstrate that, during the design of the underground tank, every effort has been made to:
  - Minimize the need for entry into confined spaces by modifying equipment and its installation; and
  - Permit periodic operation, inspection, or maintenance from outside the space so that entry will not be necessary.
  - Facilitate non-entry rescue to the extent feasible
- Considerations for the design of entry and exit points include:
  - Unless otherwise approved by the *City Engineer*, provide unrestricted access and egress to allow workers to enter without having to contort their bodies, crawl, or use their hands to climb in or out.
  - Provide large access openings, through which workers can pass easily and quickly while wearing Self-Contained Breathing Apparatus (SCBA) and egress systems.
  - When possible, provide standard overhead clearances so that workers can stand in the space whenever possible.
  - When feasible, install standard steps with handrails in lieu of ladders or spiral staircases. Steps allow safer, unrestricted entry and exit from the space.
  - Provide sufficient aisle clearances within the space and provide clear access to openings and exits. Locate pipes, ducts and other equipment so that workers do not have to climb over, under or around them.
  - When applicable, provide multiple access openings at regular intervals in long spaces, such as crawl spaces and tunnels, to ensure that crews' ability to exit the space is not restricted by distance.
- Considerations for the design to ensure the ability of rescue include:
  - When possible, provide multiple access openings into the space, preferably at different locations for better access to all areas of the space.
  - Ensure openings are at least 61 cm (24 inches) in diameter.
  - Ensure adequate overhead clearance for use of a tripod or davit arm retrieval system

during vertical entries. If there is not sufficient clearance, install a permanent anchor point (with at least 5,000 pounds static load capacity) above the opening to which a pulley or winch can be attached.

- Employ a pulley system or install regular access points for rescue from spaces where a horizontal entry is used.
- Install large release hatches at the bottoms of sloped hoppers and silos that can be opened to empty the structures quickly in case of engulfment.

- The *Consulting Engineer* shall provide a low flow channel through the detention system utilizing the half section of pipe in the bottom of the detention facility. This half pipe shall be sized to convey *Runoff* from the 6-month (i.e., 72% of a 2-year event), rainfall events. Gradient of the low flow channel shall be a minimum of 0.5%.
- A sump manhole accessible to truck mounted vacuum equipment shall be provided on the upstream side of all underground storage facilities.

5.6.10 Storage Pipes

The *City Engineer* may approve inline storage pipes only if the *Consulting Engineer* signs and seals a letter stating other storage options are physically infeasible.

Where inline detention within pipes is the only alternative, the *Consulting Engineer* shall provide the following:

- A low flow channel through the detention system utilizing the half section of pipe in the bottom of the detention facility equal in diameter to the largest incoming pipe with adequate capacity to carry *Pre-development* rate flows. Gradient of the low flow channel shall be a minimum of 0.5%.
- A sump which shall be accessible to truck mounted vacuum equipment. (Maximum length of suction hose available from a truck mounted vacuum to the bottom of the sump is typically 20 m).

5.6.11 Communal Wet Ponds

The *City Engineer* may approve community wet ponds as detention facilities when they enhance the aesthetic of the site and all public safety measures are addressed.

- Wet ponds are similar to lakes in that there is always a permanent body of water. During rainfall events, additional temporary storage is provided above the permanent level. After the rainstorm, the water level gradually recedes back to its original level.
- Wet ponds have a moderate to high capacity to remove urban pollutants, and establishment of vegetative zones around and in the pond can enhance pollutant removal efficiency. Therefore, wet ponds are used for water quality enhancement as well as for restricting downstream discharge to predetermined rates to reduce downstream flooding.
  - Permanent Pool is the portion of a wet pond which retains a permanent volume and depth of water. All wet ponds shall have a permanent water elevation delineated as the permanent water level, more commonly referred to as the Normal Water Level (NWL).
    - The permanent pool acts as a buffer by slowing down rainwater entering the pond and trapping pollutants. Thus, forebays and permanent pools are the ponds' sources of water quality enhancement

- Wet ponds must be designed to provide active storage for the design storm (10 or 100-year) based on a 24-hour storm event. The corresponding water level is called the High Water Level (HWL) and the active storage corresponds to the temporary storage volume provided between the NWL and the HWL.

- *Consulting Engineers* shall apply the latest techniques in designing rainwater ponds to maximize their environmental and social values.
- All wet ponds shall include a 0.5 m deep pre-treatment sump lined with riprap as per section D of the standard drawings in this Design Criteria Manual (showing a typical dry pond with forebay).
- An oil interceptor structure or *City* approved equivalent *Source Control* treatment set of BMPs such as *Infiltration Swale*s, porous asphalt pavements or rain gardens shall be installed upstream of the pond inlet(s).
- An outlet structure shall be designed to ensure the post-development discharge rates meet the performance targets specified in Section 5.6.
- Storage facilities with open water greater than 1.0 m depth may be hazardous to the public. If the side slope is steeper than 7:1 and the design depth is greater than 1.0 meters, fencing or log rail barriers with proper signage shall be erected along the perimeter of the storage ponds.
  - A minimum of four signs shall be installed around the perimeter of the wet pond with the following wording:

Danger of Drowning
Please keep out

- An Access tract or *Road* sufficient to accommodate maintenance vehicles shall be provided.

  Note: All *City*-owned ponds shall have a minimum 3-meter wide all-weather vehicle access from a public *Road SRW* to the control outlet and other works requiring maintenance. The maximum grade of the access is 8%. The surface shall be finished with asphalt, concrete, or turf stones suitable for maintenance traffic. A sediment sump accessible to maintenance equipment shall be provided near the pond inlet.

- The emergency overflow elevation of the pond shall be at least 0.3 m below the Minimum *Building* Elevation of the neighbouring lots.

Design Summary Guide for Wet Ponds

Design Element	Design Objective	Minimum Criteria	Recommended Criteria
Length-Width Ratio	Maximize flow path and minimize short-circuiting	3:1, unless approved by *City Engineer*	4:1 to 5:1
Pond Depth	Safety	• Permanent Pool (bottom to NWL): 1.0 m minimum and 1.5 m maximum • NWL to HWL: 2.0 m maximum. • Freeboard 0.3 m	• Permanent Pool: 1.0 m • NWL to HWL: 1.0 m
Hydraulic Grade Line (*HGL*)	To prevent backup	No upstream pipe surcharging to ground	HGL impact confined to pipe adjacent to pond
Landscaping	Public amenity and safety	Per *City Engineer*'s instruction	
Side Slopes	Safety	• Above HWL: No steeper than 5H:1V • Outward/exterior facing: No steeper than 3H:1V • NWL to HWL: No steeper than 5H:1V • Below NWL: No steeper than 3H:1V	NWL to HWL: No steeper than 7H:1V
Geotechnical	*Infiltration*	Max 1x 10^{-6} cm/s when groundwater is not used to feed the permanent pool	Liner system required to maintain permanent pool if not dug into the groundwater
Inlet	Safety and maintenance	• Obvert: 0.8 m below NWL • Invert: 100 mm above bottom. • Skimmer Manhole required to remove floatables, oil/grit, etc.	
Orifice	Avoid Plugging	50 mm diameter	100 mm diameter
Trash Rack	Protect orifice from plugging	• Required when orifice ≤ 200 mm diameter. • No trash rack required when outlet is fully submerged.	
Gate Valve	Bypass & Maintenance	300 mm diameter required	
Maintenance Vehicle Access	Access for equipment	• Width: 3.0 m, • Turning Radius: 8 m • *Road* structure must accommodate maintenance vehicle weight and loading • Maintenance equipment ramp required.	Width: 4.0 m
Fencing	Safety	Required	

5.6.12 Operating and Maintenance (O&M) Manual

To ensure that the designed detention storage facility is operated and maintained, an O&M manual acceptable to the *City Engineer* is required for all detention facilities. The manual shall be prepared by the *Consulting Engineer*. The manual shall, at the minimum, contain the following:

- List of additional mechanical and electrical equipment used in the design of the facility. This shall include equipment/part lists, manufacturer's operation requirements, maintenance, service and repair instructions, and warranties;
- Outline of normal expected operational and maintenance requirements;
- Outline of emergency operating requirements;
- Long term and short-term maintenance requirements for vegetation if applicable;
- Outline of cleaning procedure in a manner that prevents sediments from entering the downstream *Storm Sewer System*; and
- Proposed frequency of detention storage facility inspection.
- The *Consulting Engineer* shall submit at least one hard copy and one electronic copy in PDF format of the *City* approved O&M manual to the *City Engineer* and/or the *Owner* of the onsite detention facility.

5.6.13 Detention Facility Location

- The location of all detention facilities shall be approved by the *City Engineer* prior to design.

~~Onsite Detention Facility Maintenance and Inspection~~

- ~~The *Owner* is responsible for the maintenance of their on-site detention facility. As such, the *Owner* at their cost shall prepare and register a Restrictive Covenant on Title which shall indemnify the *City* from any future damage claims to the property and/or other neighbouring properties due to the detention facility system malfunctioning and obligates the *Owner* to inspect and maintain their onsite detention facility regularly and as per the detention facility's O&M Manual.~~
- ~~In the case of the on-site detention malfunctioning, the *Owner* is responsible to rectify the problem. If the *Owner* fails to demonstrate to the *City Engineer* that necessary steps are taken to fix the problem, the *City* at the *Owner's* expense, shall hire a *Contractor* to fix the operational problem of the on-site detention facility.~~

5.6.14 *Final Acceptance* Certificate

- The *Final Acceptance* certificate (FAC) is required for all detention facilities.
- Issuing detention facility FAC will be pending until the *Consulting Engineer* sign and seal a report to the *City Engineer* at the end of the one-year *Maintenance Period, attesting* the detention facility's performance meets the design objectives.

5.7 South Langley Integrated Rainwater Management

5.7.1 The area, as shown in Section 15.0 (Supplemental Specifications drawings) is located roughly south of Grade Crescent and 50 Avenue where approximately three quarter of the parcels in this area are not connected to *a City*-owned storm sewer conveyance system. This means rainwater collection systems in these parcels are solely based on *Infiltration.*

5.7.2 The area is also predominantly flat with single family residential dwellings, and the soil type within is mainly gravel and sand.

5.7.3 The South Langley integrated rainwater management requirements in this section shall apply solely to those parcels that do not already have a piped connection to a downstream *City*-owned *Storm Sewer System*.

5.7.4 The main objective of the integrated rainwater management at South Langley is to capture and infiltrate 100-year *Runoff* within the next 2-3 days by implementing a combination of onsite *Infiltration* systems and offsite *Runoff* collection *Bioswales*.

5.7.5 For rainwater management purposes, the entire area is roughly divided into “West” and “East” regions, with the West region located at the west of Pleasantdale Creek, with having lower *Infiltration* rates and higher seasonal groundwater table at approximately 2.0 to 3.0 m. The East region is located at the east of the Pleasantdale Creek and has typically higher *Infiltration* rates and deeper seasonal groundwater table. See Section 15.4 of this Design Criteria Manual for the South Langley regional boundary map.

5.7.6 Unless otherwise required by the *City Engineer*, the integrated rainwater management system at South Langley shall include an onsite Infiltration Facility to contain and infiltrate onsite rainwater *Runoff*.

- A *Roadway Bioswale* to collect *Road Runoff is also required* for *Subdivision* applications.

More details on the design components of this *Infiltration* based rainwater management system are provided below.

The *Applicant* shall construct these components at their cost. Section 15.4 of this Design Criteria Manual provides drawings related to the required rainwater collection system design at South Langley.

5.7.7 The *Applicant* shall satisfy the *City Engineer* that there will be no risk of groundwater contamination.

5.7.8 The integrated rainwater management system shall capture and infiltrate onsite and roadside rainwater *Runoff*. It shall generally follow criteria outlined in Metro Vancouver's "Stormwater Source Control Design Guidelines 2012", with some design elements such as structure depth chosen specifically for the local area conditions.

5.7.9 Upon the installation and completion of the onsite Infiltration Facility and the required BMPs, as per Section 5.3 of this Design Criteria Manual, the *Consulting Engineer* shall submit a signed and sealed field report and Building Code Schedule C-B to the *City*’s Building officials attesting that:

- *Amended Soil* at the property yard has been placed properly; and
- All the onsite Infiltration Facility components are installed as designed.

5.7.10 A minimum building <u>setback of 8.5 m from the property line</u> is required to have the proposed onsite Infiltration Facility at the front yard meet the building code requirements and to provide enough clearance between the onsite Infiltration Facility and the Bioswale to facilitate their optimal operations.

5.7.11 <u>Onsite Rainwater Management Requirements for Addition to a Dwelling or Accessory *Building*</u>

- An onsite Infiltration Facility shall be installed to capture and infiltrate the excess *Runoff* volume generated for a 100-year, 24-hour rainfall event as a result of the incremental increase in *Runoff* due to the proposed addition to a dwelling or accessory *Buildings*.
- All roof drainage due to the dwelling addition or accessory *Building* shall be directed to the Infiltration Facility.
- Based on the added roof area, the *Applicant* shall use the following table to find their required Infiltration Gallery size.

Roof Area (m^2)	Infiltration Galley Size			
	Storage Volume (Including Drain Rock) in m^3	**Length (No. of GRAF EcoBloc Inspect Smart Modules)**	**Width (No. of GRAF EcoBloc Inspect Smart Modules)**	**Depth (No. of GRAF EcoBloc Inspect Smart Modules)**
Up to 25	Not required			
25 to 40	1.30	1.6 m (2 modules)	0.8 m (1 module)	0.33 m (1 module)
40 to 55	1.85	1.6 m (2 modules)	1.6 m (2 modules)	0.33 m (1 module)
55 to 70	2.6	2.4 m (3 modules)	1.6 m (2 modules)	0.33 m (1 module)

5.7.12 Onsite Rainwater Management Requirements for Reconstruction of a Dwelling

- The onsite rainwater management requirements would be the same as what are required for single family dwelling *Subdivision* applications.
- Unless otherwise required by the *City Engineer*, there will be no off-site rainwater management requirements (i.e., constructing *Bioswales*).

5.7.13 Onsite Rainwater Management Requirements for *Subdivisions*

5.7.13.1 The following shall be provided on single family residential dwelling *Subdivisions:*

An onsite Infiltration Facility shall be used to capture and infiltrate a 100-year, 24-hour post-development rainfall *Runoff*.

- Unless otherwise approved by *the City Engineer, all Subdivisions* shall include *Amended Soils* and Porous Asphalt (PA) driveways as prescribed in this Design Criteria Manual;
- *An Infiltration* Facility shall typically include:
  - An onsite Infiltration Gallery to capture and infiltrate onsite *Runoff*; and
  - A none-perforated sediment trap manhole to be installed at the upstream of the Infiltration Gallery to prevent it from silt accumulation and malfunctioning.
- The Infiltration Facility shall be designed at *Subdivision* stage but it shall not be constructed until *Building* Permit stage as noted on the drawing.
- Infiltration Facility sites shall be protected during construction from either compaction or sedimentation, by pre-identification and fencing or other means.

5.7.13.2 Infiltration Gallery Design Criteria

- Infiltration Galleries would rely on the collection, detention storage, and *Infiltration* to manage on-site rainwater *Runoff*. The main objective of this approach is to manage *Runoff* onsite to:
  - Alleviate/eliminate overflows to offsite; and
  - Reduce/eliminate the need for additional downstream storm conveyance systems.
- The onsite Infiltration Gallery shall be "GRAF EcoBloc Inspect Smart" or *City* approved equivalent, which is a modular system that can be implemented within space constraints in subdivided lots throughout the South Langley area.
  - Further product information for the EcoBloc Inspect Smart system is available from local supplier Barr Plastics.
  - Each EcoBloc Inspect Smart module has 800 mm (width) x 800 mm (length) x 330 mm (height) dimensions.
  - The depth to the top of the Infiltration Gallery shall be at least 0.35 m.
  - At least one inspection/access manhole (EcoBloc Inspect Smart Plus Shaft or *City* approved equivalent) to the Infiltration Gallery is required. Inspection/access manholes allow for inspection and/or flushing of the entire Infiltration Gallery. The *City* inspectors will also use them to verify whether the system is functioning as designed.
    - Larger Infiltration Galleries may require two or more inspection/access manholes. The *Consulting Engineer* is encouraged to select the optimal number of inspection/access manholes in consultation with the Infiltration Gallery manufacturer (i.e., EcoBloc Inspect Smart or *City* approved equivalent).
- 19 mm to 25 mm drain rock buffer with a 40% porosity shall be installed around the Infiltration Gallery to reduce the risk of plugging at the interface, to increase water storage volume, and increase the contact area for *Infiltration*. The drain rock, as shown in the related drawings in Section 15.4 that shall have:
  - 0.3 m lifts surrounding the Infiltration Gallery;
  - 0.1 m depth below the Infiltration Gallery
- Drain rock shall be wrapped with non-woven geotextile fabric with a 400 mm overlap to minimize migration of fines into the Infiltration Gallery and maintain the void volume required for Runoff storage.
- A soil report prepared by a Professional Geotechnical Engineer shall specify the site's <u>final</u> *Infiltration* rate (in mm/hour) and groundwater table depth (in meters).
  - The bottom of the Infiltration Gallery shall be 1.0 m above the groundwater table or bedrock, as per EcoBloc Inspect Smart system manufacturer's recommendation.
    - When a 1.0 m clearance is not achievable due to the high groundwater table at the subdivided lot, the *City Engineer* may accept a minimum of 0.6 m, as per 2012 Metro Vancouver's Stormwater Source Control Guidelines. *Consulting Engineers* are required to contact the *City Engineer* to obtain further instructions on an acceptable alternative design.

- The Infiltration Gallery's footprint area shall leave enough spaces at the front yard of the property for water and sanitary sewer service connections; and
- Unless otherwise approved by the *City Engineer*, the Infiltration Gallery shall not be built under the driveway.
- Rainfall *Runoff* from the entire lot area shall be used when sizing the Infiltration Gallery for *Subdivisions* to simulate saturated soil response to high intensity rainfalls due to a 100-year event.
- A *Runoff* coefficient of 0.65 may be used when calculating a 100-year rainfall *Runoff* inflow rates to account for the required rainwater BMPs. A sample Infiltration Galley design spreadsheet has been provided in Section 15.4 of this Design Criteria Manual that is intended only to show the required design parameters for proper sizing.
  - An electronic copy of the design spreadsheet is available upon request. The *City* does not guarantee the accuracy of the design spreadsheet and while it is believed that the calculations in this design spreadsheet are correct, the user is ultimately responsible for the correctness of any calculations it produces.
- As per "GRAF EcoBloc Inspect Smart" manufacturer's recommendation, a "Reservoir Coefficient" of 0.96 shall be used when sizing the Infiltration Gallery.
- Depending on the groundwater depth and the site's soil infiltration rate, the *City Engineer* may require a safety factor of 1.1 be included in the design.
- The *Consulting Engineer*'s proposed detailed design, including all the pertinent design calculations, shall be submitted in electronic formats (with spreadsheet cells unlocked) to the *City Engineer* for review and approval.
- Excess *Runoff* due to more intense rainfall events shall overflow within the property to the *Amended Soil* through an overflow pipe, as shown in Section 15.4 of this Design Criteria Manual.
- Infiltration Facility Location:
  - Unless otherwise approved by the *City Engineer*, the Infiltration Gallery shall be installed in the front yard of properties to:
    - Prevent overflows potentially spilling to neighbouring properties, due to possible malfunctioning or excess rainwater *Runoff*; and
    - Easy access by *City* staff for occasional inspections.
  - Properties on the north side of east-west streets at South Langley are generally sloped toward their backyards. As such, an Infiltration Facility may be installed in the backyard. In these cases, all the necessary precautionary measures shall be taken by the *Consulting Engineer* and the *Owner* to make sure the neighbouring properties will not be affected if the Facility malfunctions.
  - Infiltration Gallery shall be at least 5.0 m away from the foundation of the nearest *Building* and shall have a minimum of 1.0 m separation (preferably 1.5 m when feasible) from the property line.
- Design drawings reflecting front yard and backyard drainage configurations for private lots are presented in Section 15.4 of this Design Criteria Manual.
- To avoid possible root intrusions, planting trees with their driplines at the Infiltration Gallery are strictly prohibited.

5.7.13.3 Rooftop *Runoff* shall not be discharged directly to the Infiltration Gallery. Instead, they shall be directed to where the 450 mm *Amended Soils* are provided. *Swales* and/or lawn basins shall direct the excess *Runoff* to the Infiltration Gallery, when needed.

- Measures (such as sumps at the bottom of downspouts and all other incoming flows) shall be required to ensure that this system stays free and clear of leaves, conifer needles and other debris.
- Depending on the lot grading, landscape drains may be required particularly when dealing with side yard concrete walks or other flow path interruptions.

5.7.13.4 Infiltration Gallery Maintenance Requirements

- As Infiltration Galleries will be located in private lots, its rainwater collection and *Infiltration* functions will be dependant upon *Owners* to conduct routine maintenance practices.
- The following is a checklist of maintenance tasks, most of which have been adopted from the Metro Vancouver Source Control Guidelines:
  - Check for accumulation of sediment or debris monthly.
  - Maintain surface drainage paths to sediment trap manholes at all times.
  - Keep the surface of sediment trap manholes clear of debris at all times.
  - Sediment and debris collected in the sediment trap manhole shall be removed as needed to prevent impediment to system function.
  - Inspect the Infiltration Gallery and piping on an annual basis. Piping to be cleaned as required.
  - Regularly inspect gutters and roof leaders. Clean as necessary.

5.7.13.5 Sediment Trap Manhole Design

- Unless otherwise approved by the *City Engineer*, crushed gravel or drain rocks underneath the sediment trap manhole shall use clean round or crushed gravel (min. 38 mm, max. 75 mm) with a 40% porosity, as per Metro Vancouver's 2012 Stormwater Source Control Design Guidelines.

5.7.14 Roadside *Runoff* collection system

5.7.14.1 Unless otherwise approved by the *City Engineer, Roads* that are serviced by an existing perforated storm sewer pipe shall be upgraded and/or extended to collect and infiltrate *Road Runoff*.

5.7.14.2 *Roads* with no existing perforated storm sewer pipes shall be serviced by *Roadway Bioswales*.

- *Roadway Bioswales* shall be located in public *SRWs* and shall front properties. *Infiltration* trenches shall be installed to capture *Runoff* from the *Road SRW* and convey it to the *Bioswales*.

5.7.14.3 *Roadway Bioswale* Design Criteria

- *Bioswale* landscaping shall be free from trees or shrubs in and around the *Roadway Bioswale* to protect the onsite Infiltration Gallery from root intrusion.

- *Depending* on the existing/proposed South Langley *Road* SRW widths, four *Bioswale* sizes with their width ranging from 1.9 m to 4.4 m are available to be used for roadside *Runoff* collection. The *Roads* with a higher percent of perviousness result in a lower relative *Runoff* and hence, smaller *Bioswales*. The designed *Bioswales* are not expected to produce overflows, as they are sized to capture and infiltrate the entire road *Runoff* due to a 100-year, 24-hour rainfall event.
- A minimum depth of 450 mm of Treatment Soil/Growing Medium, Per Canadian Landscape Standard, shall be placed on *Roadway Bioswales*.
  - *Bioswale* growing medium shall be a sand-based bio-filtration mix specified by the *Landscape Architect* or other qualified professional and conforming to the Canadian Landscape Standard.
- For aesthetic benefits and to limit maintenance requirements, the following characteristics are required:
  - Salt and drought tolerant species of vegetation shall be installed.
  - Vegetation may include grasses or perennials and shall be suited to the sun/shade conditions at individual sites.
  - A selection of evergreen and deciduous species would increase the level of seasonal interest.
  - Select vegetation to suit the *Bioswale* cross-sectional profile, with consideration for the typically drier side slopes and commonly saturated swale bottom.
- The following Tables outline key parameters for *Bioswales* with *Bioswale* "A" being the smallest and "D" being the largest.

Road SRW	***City*'s Supplemental Drawing Details** (Per Section 15.4, Design Criteria Manual)	**Left Bioswale**	**Right Bioswale**
15.0 m	SS-SL07	A	A
15.0 – 16.0 m	SS-SL11	D	Not needed*
16.5 m	SS-SL08	B	B
20.0 m	SS-SL09	C	C

*: Local Road for this cross section is not crowned and can only convey runoff to one side of the street

***Bioswale* Parameter[1]**	***Bioswale***				**Remarks**
	A	**B**	**C**	**D**	
Minimum Length per Lot[2]	7.0 m				Based on 16.0 m typical frontage and to accommodate space for access driveway and/or boulevard infrastructures such as hydrants or light posts.
Top Width*	1.9 m	2.1 m	2.4 m	4.44 m	
Side Slope	2H:1V			3H:1V	
Bottom Width	0.7 m	0.9 m	1.2 m	2.6 m	
Max Ponded Depth	0.2 m				
Minimum Freeboard	0.1 m				Per Metro Vancouver Stormwater Source Control Design Guidelines 2012
Treatment Soil (Growing Medium) Depth	0.45 m				Per Canadian Landscape Standard
Treatment Soil Porosity	0.4				
Sand Depth	0.05 m				To protect geotextile from clogging
Drain Rock Size	19 mm to 25 mm				
Drain Rock Reservoir Width	0.7 m	0.9 m	1.2 m	2.6 m	Should be equal to swale bottom width
Drain Rock Reservoir Depth[2]	0.8 m	0.7 m	0.7 m	0.5 m	
Drain Rock Porosity	0.4				
Total Depth	1.6 m	1.5 m	1.5 m	1.3 m	Includes: Ponded Depth (0.2 m) + Free Board (0.1) + Treatment Soil Depth (0.45 m) + Sand Depth (0.05 m) + Drain Rock Reservoir Depth (varies)

Notes: (1) The *Consulting Engineer* shall also generally follow the criteria for *Infiltration* trenches outlined in the Metro Vancouver Stormwater Source Control Design Guidelines 2012 and take into consideration local conditions/constraints such as groundwater table depth and the available pervious area between the property line, when finalizing the design of a *Bioswale* in front of their property.

(2) Add an additional 0.2 m to the required drain rock depth and reduce the Bioswale length from 7.0 m to 6.0 m when a fire hydrant or streetlight is needed at the property frontage.

- Drain rock, as shown in the related drawing in Section 15.4, shall cover the bottom of the *Bioswale* to reduce the risk of plugging at the bottom interface and to increase water storage volume for *Infiltration*.
- Drain rock shall be wrapped with non-woven geotextile fabric with a 400 mm overlap to minimize migration of fines into the *Bioswale* and maintain the void volume required for Runoff storage.
- Edges of *Bioswale* shall include erosion protection, sediment cleanouts, and flow spreaders at inlet sources.

- Measures such as trench dams shall be installed at utility crossings to prevent seepage into utility trenches.
  - Trench dams are concrete or clay blocks surrounding linear utilities to prevent *Bioswale Infiltration* from piping through the utility trench. These structures are shown on the detail drawings in Section 15.4 of this Design Criteria Manual.
  - Additional *Roadway Bioswale* length may be required to compensate for the storage volume and *Infiltration* surface when trench dams are installed.
- *Sidewalks*, and *Road* curbs and gutters shall be constructed with grading that allows *Runoff* to be collected by the *Bioswale.*
  - *Road Runoff* shall be collected and discharged into the *Bioswale* through a curb inlet with trench drain, as per Section 15.4.

~~5.7.14.2 Roadway *Bioswale* Maintenance Requirements~~

- ~~The *Owner* is responsible for maintaining their frontline bioswale.~~

~~**The *Owner* shall:**~~

- ~~Conduct routine maintenance practices of the property's front *Roadway Bioswale*.~~
- ~~Regularly remove trash or debris from the *Bioswale.*~~
- ~~Identify and remove any sources of issues such as standing water or erosion.~~
- ~~On *Bioswale* surface, conduct routine maintenance similar to perennial garden bed, including removable of weeds and dead vegetation.~~
- ~~Amend top layer of growing medium every few years or as necessary to maintain its designed infiltration capability.~~
- ~~Avoid over-compaction of growing medium when conducting maintenance practices.~~
- ~~Maintain grass areas to mowed height between 50mm and 150mm. Landscape maintenance standards shall be to the BC Landscape Standard, latest Edition, Maintenance Level 4: Open Space / Play Area. (Metro Vancouver Source Controls Design Guidelines, 2012).~~

~~5.7.15 *Owner*'s Commitments~~

~~As a part of the *Subdivision* approval process, the *Owner* at their cost shall prepare and register a Restrictive Covenant on Title that:~~

- ~~Shall require the property *Owner* of the land, with an *Infiltration* based integrated rainwater management system, to:~~
  - ~~Periodically at all reasonable times; and~~
  - ~~Without notice during the times the *Bioswale* and/or onsite Infiltration Gallery are overflowing.~~

~~grant property access to the *City* to inspect their onsite Infiltration Facility to verify it is functioning as designed.~~

- ~~Shall not add impervious materials to the subdivided lot by paving, adding onsite sheds, or any other similar impervious infrastructures without the *City*'s explicitly written permission in advance.~~

- ~~Require the *Owner* to maintain their frontage *Roadway Bioswale*, as per the requirements outlined in the City's Design Criteria Manual.~~

- ~~Require the *Owner* to maintain their onsite Infiltration Facility and frontage *Roadway Bioswale*, as per the requirements outlined in this Design Criteria Manual.~~

- ~~Require the *Owner* to inform the *City Engineer* and acknowledge in writing within two working days, when they find out (through their observation, and/or an inspection by a professional or *City* staff) their onsite Infiltration Gallery and/or frontage *Bioswale* are not functioning as designed and accept taking responsibility to rectify the problem at their cost within 4 weeks of the time the problem was made known to the *Owner*.~~

- ~~Agree that if the *Owner* fails to fix the malfunctioning Infiltration Facility and/or frontage *Bioswale* within the aforementioned time frame, the *City* at the *Owner*'s expense, has the right to hire a Contractor to fix the operational problems of these infrastructures at the *Owner*'s cost. The *City* shall include the cost of rectifying the operational problems and the *City*'s related administration cost (i.e., 5% of the cost of rectifying the problems) in the *Owner's* respective property tax, pursuant to section 258 of the Community Charter, SBC~~ 2003 c. 26.

- ~~Indemnify and hold harmless the *City* and its employees in respect of any and all future losses, damage claims, injuries, or expenses whether be to the property itself or its neighbouring properties, due to malfunctioning of and/or overflows from their onsite Infiltration Facility and/or frontage *Bioswale* to the ground.~~

5.8 Water Balance Model

The *City* promotes using Water Balance Model www.waterbalance.ca as a more robust approach to investigate the effectiveness of the selected rainwater management method on a site's long-term hydrological response. The Water Balance Model (WBM) is an on-line tool that helps users to gauge the potential for developing or redeveloping communities while maintaining the original hydrologic condition. Using rainfall volume as a performance target to quantify the effectiveness of various rainwater *Source Control* strategies, the model gives users a convenient pre-design planning tool that they can access over the Internet. The model evaluates the effectiveness of applying different rainwater *Source Controls* under different *Development* conditions.

The *City Engineer* may require the *Applicants* to use Water Balance Model (WBM) to demonstrate the post-development hydrological response is controlled and therefore consistent with the objective of this Design Criteria Manual.

SECTION 6.0 – Sanitary Sewer System

6.1 General

The design of *Sanitary Sewer Systems* in the *City* shall conform to the standards and specifications prescribed by this Design Criteria manual, and the latest edition of *MMCD* Design Guidelines, Metro Vancouver "Liquid Waste Management Plan", and other relevant *City* Bylaws.

~~In the event of a conflict between the criteria set in this Design Criteria Manual and *MMCD* Design Guidelines and/or Metro Vancouver "Liquid Waste Management Plan", this Design Criteria Manual will take precedence.~~

The requirements in this section are applicable to all construction projects in the *City*, including *Subdivisions/Development related projects* covered under this Design Criteria Manual; however, it is not applicable to strata *Subdivisions/Developments* as these are exempt under the *Local Government Act*.

6.2 Pre-Design Requirements

6.2.1 The *City* prohibits the use and/or design of private sanitary pump systems, unless the *Consulting Engineer* demonstrates, to the satisfaction of the *City Engineer, there is no other feasible solutions to discharge onsite sewage to the City's Sanitary Sewer System*.

- ~~When and if a private sanitary pump system is approved, *the Owner* at their cost shall prepare and register a Restrictive Covenant on Title before the *Servicing Agreement* between the *City* and the *Owner* is signed, *that shall indemnify the City from any future damage claims* originated from the property *Owner* and/or third parties, *due to the system malfunctioning.*~~

6.2.2 At the discretion of the *City Engineer*, assessment of the existing *Sanitary Sewer System* capacity for ultimate land use (*OCP*) conditions and loadings may be required. The assessment shall include loadings from the contributing catchment area and include the *Development* site. Depending on the information from the assessment report, upgrading of the sanitary capacity may be required.

6.2.3 Depending on the complexity and size of the *Subdivision/Development*, the *City Engineer* at their discretion may require the *Applicant* to pay the *City*'s standing consulting engineering company to model the *Sanitary Sewer System* to investigate the impact of the *Subdivision/Development* on the system capacity under the existing and future/*OCP* scenarios.

6.2.4 The *Consulting Engineer* shall confirm with the *City Engineer* the peaking factor and ultimate density of the population expected in the catchment area.

6.3 Design Flows

The design flows in a sanitary sewer shall be computed on the basis of ultimate land use (*OCP*) of the upstream lands within the catchment area.

6.3.1 Sanitary sewers shall be designed using the Peak Wet Weather Flow (PWWF).

Q_{DESIGN} (PWWF) = Peak Sewage flow from all sources with gravity discharge + *Infiltration* and Inflow

Peak Sewage from all Sources = Q_{ADWF} X Peaking Factor + Q_{PUMPED}

Where:

Q_{ADWF} = Average daily sewage flows from all sources for the collection system

Q_{PUMPED} = Peak wet weather pumping rate from all upstream pump stations

For residential areas, the peaking factor shall be calculated using the Harmon equation. All non-residential demands are to be converted to equivalent populations for peaking purposes.

$$\text{Peaking Factor} = 1 + \frac{14}{4+\sqrt{\frac{Population}{1000}}}$$

6.3.2 Variables are derived from the following:

Average daily flow	= 300 litres/day/capita (l/d/c)
***Infiltration* & Inflow allowance**	= 11,200 litres/day/hectare (l/d/ha)

6.3.3 For the following Institutional special uses, design flows (ADWF) will be modified as follows:

a. Hospitals, use 900 litre/day/bed
b. Nursing and Rest Homes, use 450 litres/day/bed

Note: Do not apply peaking factor for Institutional load calculations.

6.4 Pipe Design

6.4.1 Hydraulics

- The *Consulting Engineer* will be required to tabulate the calculations on the "Sanitary Sewer Design Sheet" (SS-S01), for submission along with the appropriate plans and other relevant information.

6.4.2 Gravity Sewers

- Use Manning's formula:

$$Q = \frac{AR^{0.667} S^{0.5}}{n}$$

Where

Q	=	design flow in m^3/s
A	=	cross-sectional area in m^2
R	=	hydraulic radius (area/wetted perimeter) in m
S	=	slope of *Hydraulic Grade line* in m/m
n	=	roughness coefficient = 0.013 for all pipes

- Unless otherwise approved by the *City Engineer*, construct sewer with PVC pipes.
- Terminal sections of mains serving 10 homes or less shall have a minimum grade of 1.0%.
- Design gravity sewers to flow at less than full depth as follows (as per *MMCD*):

Sewer Diameter (mm)	Allowable Depth as a percentage of Diameter
Less or equal to 200	50%
250	60%
Greater than 300	70%

6.4.3 Forcemain Sewers

- Use Hazen-Williams formula:

$$Q = \frac{CD^{2.63} S^{0.54}}{278{,}780}$$

Where

Q = rate of flow in l/s
D = internal pipe diameter in mm
S = slope of *Hydraulic Grade line* in m/m
C = friction coefficient = 120 for all pipes

- HDPE or PVC pipes shall be used for sanitary forcemains. The *Consulting Engineer* shall confirm the selected pipe material with the *City Engineer* prior to finalizing the design.

6.4.4 Velocities

- Minimum design flow velocity for gravity mains shall be 0.6 m/s. Design flow velocities of 0.9 to 1.0 m/s are recommended.
- Forcemain = 0.9 m/sec (minimum) and 3.0 m/sec (maximum).
- Gravity sewers with velocities > than 4.5 m/sec shall be anchored.

6.4.5 Depth of Mains

- The depth at crown shall be designed to allow gravity service connections for all existing or proposed *Parcel*s abutting the main. All mains shall have a minimum 1.0 m cover.
- Mains shall be designed to service all upstream lands in the appropriate sewer catchment area as directed by the *City Engineer*.

6.5 Hydraulic Modeling – Sanitary Sewer

The *City* has adopted Innovyze InfoSWMM as its standard sanitary sewer modeling software application. Other programs may be considered if approved by the *City Engineer*.

Hydraulic modeling of the *City*'s *Sanitary Sewer System* may be needed to analyze system deficiencies due to the *Subdivision/Development* of lands under the *OCP* scenario.

6.5.1 Unless otherwise approved by the *City Engineer*,

- All *Subdivision/Development* applications with greater or equal to ten (10) residential units; and
- All *Industrial, Commercial*, and Institutional (ICI) applications with their wastewater loads similar to these residential *Subdivision/Development* applications

shall conduct sanitary sewer modeling by the *City*'s standing hydraulic modeling consultant to determine whether the *City*'s *Sanitary Sewer System* under *OCP* scenario will require system upgrades to convey the peak wet weather flows, generated by the *Subdivision/Development*, without being *Surcharged* or causing backups in the system.

6.5.2 For all residential *Subdivision/Development* applications with greater than four (4), but less than ten (10) units and ICI applications with their peak wet weather flow requirements similar to these residential *Subdivision/Development* applications, an *OCP* scenario sanitary sewer modeling by the *City*'s standing hydraulic modeling consultant may be required to determine if the existing sanitary collection system

would require upgrades. *Consulting Engineers* shall contact the *City Engineer* for direction in this regard before proceeding with their designs.

6.5.3 Sanitary sewer modeling is not required for *Subdivision/Development* applications with less or equal to four (4) units. All non-*Subdivision/Development* related modeling exercises shall be based on the existing and the future land-use designations, as specified by the *City*'s *OCP*. Conservative parameters shall be selected if calibration data is not available.

- The *City Engineer* may require additional 5-year incremental modeling scenarios to estimate asset upgrade timing for capital budget planning purposes.

6.5.4 System Capacity Analysis – Gravity Mains

Unless otherwise approved by the *City Engineer*, the criteria outlined in the following Tables shall be used to assess the capacity of all gravity mains within the *City*'s system and to assign a hydraulic level of service (HLoS) rating.

Hydraulic Level of Service Criteria Scoring (Gravity Main)

Criteria	Lateral/Collector <= 250 mm	Trunk 300-675 mm	Interceptor >= 750 mm
Hydraulic Capacity (q/Q*)			
q/Q < 0.7	1	1	1
0.7 ≤ q/Q < 1.0	2	2	2
q/Q ≥ 1.0	3	3	3
***Hydraulic Grade Line* (*HGL*)**			
HGL <= Crown	1	1	1
Crown < HGL < (GE**- 0.5 m)	2	1	1
(GE**- 0.5 m) =< HGL < (GE - 0.3) For minimum 15 minutes	3	2	2
HGL >= (GE - 0.3) For minimum 15 minutes	3	3	3
Velocity (v)			
v < 0.6 m/s	Pass	Fail	Fail
v >= 0.6 m/s	Pass	Pass	Pass

*- q/Q : Peak flow / Full pipe flow.
**- GE : Ground Elevation.

Hydraulic Level of Service Ratings (Gravity Main)

HLoS Rating	Capacity	HGL	Velocity	Description
A	1	1	Pass	Pipe performing as designed
B	1	1	Fail	Adequate capacity, low velocity indicates potential sedimentation
C	1	2 or 3	Pass or Fail*	Adequate capacity, downstream condition causing backwater

HLoS Rating	Capacity	HGL	Velocity	Description
D	2	1, 2 or 3	Pass or Fail*	Marginal capacity
	3	1	Pass or Fail*	
E	3	2	Pass or Fail*	Capacity exceeded and surcharging likely
F	3	3	Pass or Fail*	Capacity exceeded and overflow likely

*- HLoS ratings from C-F are independent of velocity criteria.

In general, ratings of 'A', 'B', 'C' and 'D' will not trigger an upgrade as there is capacity available in the gravity main to convey flows.

Unless otherwise approved by the *City Engineer*, only gravity mains receiving a HLoS rating of 'E' and 'F' shall be considered for upgrade. A gravity main receiving an 'E' rating requires an upgrade as the hydraulic capacity has been exceeded and is likely causing surcharging to occur. A gravity main receiving an 'F' rating indicates that surcharging to the manhole rim is likely, increasing the priority of the upgrade.

6.5.5 System Capacity Analysis - Pump Stations

Pump stations in general are comprised of three (3) components: pump(s), wet well and downstream forcemain.

Each of the three components in a pump station shall be assessed to determine its HLoS rating.

Unless otherwise approved by the *City Engineer*, the criteria outlined in the following Tables shall be used to assess the *City*'s pump stations, wet wells and forcemains.

Hydraulic Level of Service Criteria Scoring (Pump Station)

Criteria	Result
Pump Capacity	
PWWF ≤ Firm Capacity*	Pass
PWWF > Firm Capacity*	Fail
Wet Well Capacity	
Max. Operating Level < Inlet Pipe Invert	1
Max. Operating Level ≥ Inlet Pipe Invert (Submerged Inlet)	2
Max. Operating Level >= Max. Physical Depth	3
Forcemain Velocity	
v < 0.9 m/s	Fail
0.9 m/s ≤ v ≤ 3.0 m/s	Pass
v > 3.0 m/s	Fail

*- The pump station firm capacity shall be determined with the station's largest pump out of service.

Hydraulic Level of Service Ratings (Pump Station)

HLoS Rating	Lift Station Capacity	Wet Well Capacity	Forcemain Velocity	Description
A	Pass	1	Pass	Lift station performing as designed
B	Pass	1	Fail	Forcemain velocity outside of design range
C	Pass	2	Pass or Fail	Inlet pipe invert within pump operating range and backuplikely
D	Fail	1	Pass or Fail	Pumpcapacityexceededbutsufficientwet well capacity to attenuate additional flow
E	Fail	2	Pass or Fail	Pump capacity exceeded and backup likely
F	Pass or Fail	3	Pass or Fail	Wetwellcapacityexceededandoverflow likely

Pump stations receiving a HLoS rating of 'C' indicate that the lead pump's on-level is higher than the inlet pipe invert, causing backup to occur in the upstream pipes. This would triggers the *City* to assess these pump stations and adjust the operating conditions as required.

Pump stations receiving a HLoS rating of 'D', 'E' or 'F' shall be considered for upgrade.

6.5.6 When the *City Engineer* is not requiring sanitary sewer modeling, the *Consulting Engineer* shall instead demonstrate that all downstream sanitary sewer infrastructures for a distance of up to 500 m are capable of handling the projected increase in sanitary sewer flows created by the proposed *Subdivision/Development* within the catchment area and under the ultimate land use (*OCP*) conditions.

6.6 Sanitary Sewer Mains and Appurtenances

6.6.1 Pipe

- Minimum pipe sizes shall be:
  - Mains: 200 mm; and
  - Terminal Mains: 150 mm (serving 10 homes or less, or equivalent flow).

6.6.2 Separation from Other Utilities

- The horizontal clearance between storm and sanitary sewer pipes shall be no less than 1.0 m and the horizontal clearance between manholes shall be no less than 0.3 m.
- Storm and sanitary sewers may be installed in a common trench, provided that the design has taken into account:
  - Interference with service connections,
  - Stability of the benched portion of the trench, and
  - Conflict with manholes and appurtenances
- For separation from watermains see section 3.14.

6.6.3 When a new utility runs under an AC sanitary pipe, a segment of that AC pipe shall be replaced with a *City*-approved pipe material and extend 1.0 m into each side of the trench cut.

6.6.4 Manholes

- Locations:
  - At all changes in grade, direction and pipe size;
  - At all intersecting sewers;
  - At all terminal sections;
  - At the downstream end of *Curvilinear Sewers*;
  - Every 125 m for pipes ≤ to 900 mm diameter;
  - Every 150 m for pipes > 900 mm diameter; and
  - Shall be installed so that the lid is not in the wheel path of typical traffic flow or under potential fence lines.
- Rim Elevations
  - Unless otherwise approved by the *City Engineer*, manhole rim elevations in off-*Road* areas shall be set 50 mm above adjacent storm manhole rim elevation and 150 mm above adjacent ground to prevent *Infiltration* from surface ponding.
  - Manhole rim elevations within the *Roadway* or asphalt: See section 1.6, Rim Elevation for Two Lift Paving System.
- Types
  - Inside drop structures shall be used wherever possible to minimize the depth of the main.
  - For all drop structures, the minimum difference in grade between the inlet and outlet shall be 0.6 m.
  - Where the invert-to-invert change in grade through a manhole is >200 and ≤ 450 mm, a ramp shall be constructed in the manhole.
  - Ramps in manholes for mains ≥ 200 mm will be considered only when the manholes are ≥ 1200 mm diameter.
- Sizes (reference *MMCD* table)
  - Manholes on mains ≤ 450 mm diameter shall be 1050 mm diameter.
  - Manholes on mains > 450 mm diameter shall be minimum 1200 mm diameter or sized to fit the main.

INSIDE PIPE DIA.	INSIDE MANHOLE DIA.
450 mm and less	1050
525 and 600	1200
675 and 750	1350
900 and 1050	1500
1200 and over	Riser Manhole

6.7 Hydraulic Considerations

6.7.1 The crown of the inlet pipe shall be at or above the crown of the outlet pipe.

6.7.2 Minimum drop in elevation through manholes:

At:	Drop:
Deflections up to 22 ½°	Use upstream design grade
Deflections up to 45°	15 mm
Deflections up to 90°	30 mm

Note: There shall be no horizontal change of direction > 90° (degrees) through any manhole.

6.8 Service Connections

6.8.1 All legal properties and each unit of a residential duplex abutting a sanitary sewer main shall be provided with a connection.

6.8.2 Unless otherwise approved by the *City Engineer*, connections are to serve all plumbing by gravity. *Building* elevations shall be established accordingly.

6.8.3 Minimum diameter shall be 100 mm;

6.8.4 Minimum slopes from spring line of main to Property Line (PL) or *SRW* line shall be 2%;

6.8.5 Inspection Chambers are required for all connections to *City* mains. An Inspection Chamber shall be installed at the PL or *SRW* line as per supplemental standard drawings in this Design Criteria Manual.

- Upon the *City Engineer's* approval and when typical service connection locations (as shown in Drawing SS-G02) are not feasible, metal casting "Dobney 200 Cleanout" or *City* approved equivalent may be installed in a driveway.

6.8.6 The typical location of service connections shall be at the downstream side of the *Parcel*;

6.8.7 The minimum cover from finished surface at PL or *SRW* line to top of connection shall be 1 m;

6.8.8 The invert elevation at the property line shall be above any design *Surcharge* level in the sewage system adjacent to the lands or *parcel*;

6.8.9 All service connections shall enter the main at or above the spring-line;

6.8.10 No service connections into manholes are permitted.

- If the *Consulting Engineer* demonstrates, to the *City Engineer's* satisfaction, that connection into a manhole is the only feasible solution, then the service connection may be permitted into a manhole provided that:

  (i) The connection is not in an adverse direction to the flow in the sewer main.

  (ji) The provisions noted in the Section on "Hydraulic Losses Across Manholes" are met.

6.8.11 Only one connection per property is permitted unless otherwise approved by the *City Engineer*;

6.8.12 Service connections to new mains shall be made using wye fittings only. Connections to existing mains shall be made using saddles.

6.8.13 Onsite sanitary collection system of a large *Development* with a pipe size greater or equal to 200 mm shall connect to the *City*'s sanitary main with a manhole.

6.8.14 Unless approved otherwise by the *City Engineer*, Connections to existing mains shall be performed by the *City* at cost to the *Applicant*; and

6.8.15 Where connections to the main are for the discharge of waste for *Commercial* and *Industrial* as described in the *City*'s Sewer Rates and Regulations Bylaw, a manhole for sampling waste discharge is required.

6.9 ***Curvilinear Sewers***

6.9.1 At the discretion of the *City Engineer*, *Curvilinear Sewers* may be permitted where:

- The main is on a constant simple curve;
- The minimum radius is achieved by deflecting the pipe joint no more than ½ the deflection recommended by the manufacturer;
- All joints are located by survey for record drawing information; and
- Minimum velocity of 0.9 m/s and minimum grade of 1.0% are maintained.

6.10 Sewer Location/Corridors

6.10.1 Mains within the *Highway SRW* shall be located as per the standard typical cross-sections.

6.10.2 Where sanitary sewer mains cross private property, they shall be within a registered statutory *SRW*. The depth of the main shall determine the width of the *SRW* as follows:

Depth of Main (ground to invert)	Width of SRW with 1 pipe	Width of SRW with 2 pipes
≤ 2.5 m	3 m	4.5 m
> 2.5 m & ≤ 4 m	4 m	5.5 m
> 4 m	6 m	8.0 m

Additional *SRW* width may be required by the *City Engineer* based on a site-specific analysis.

6.10.3 Sanitary sewer mains in *SRW*s shall require access for maintenance. The access-way shall at least 3.0 meter wide and clear at all times.

~~6.10.4 When the *City*'s *Sanitary Sewer System* is within an *SRW* on private property, the *City Engineer* may require a signed and sealed geotechnical report to investigate the soil condition to recommend whether a Restrictive Covenant on Title to restrict the depth and location of any proposed footings, *Buildings*, overhangs etc. in the vicinity of the *Sanitary Sewer System* is required.~~

6.11 Sanitary Pump Stations

6.11.1 The design and construction shall conform to "Standard for Design of Sanitary Pump Stations", Section 7.0 of this Design Criteria Manual.

6.12 Hydraulic Losses Across Manholes

The following criteria shall be used when designing incoming and outgoing pipes in manholes:"

6.12.1 The spring-line of the downstream pipe shall not be higher than that of the upstream pipe.

6.12.2 Minimum drop in invert levels across manholes:

- Straight run - no drop required.
- Deflections up to 45 degrees - 15 mm drop.
- Deflections 45 degrees to 90 degrees - 30 mm drop

6.12.3 Manhole drops shall be provided as follows:

Invert Difference	Use
Up to 0.25 m	Inside ramp
0.25 to 0.90 m	Outside ramp
Over 0.90 m	Outside drop.

SECTION 7.0 – Standards for Design of Sanitary Pump Stations

The purpose of this section is to provide minimum design standards for the *City*-owned sanitary pump stations.

7.1 Pre-Design Report

7.1.1 Prior to beginning the detailed design of the pump station, the *Consulting Engineer* shall submit 2 signed and sealed copies of a pre-design report for the *City*'s review and comment.

7.1.2 The report shall include and/or address the following design considerations:

- A drawing showing the catchment area and the location of the proposed pump station and forcemain;
- Inflow calculations shall be based on the *OCP* land use designations in the catchment area, average day and peak day flows, and the number of equivalent dwelling units (*EDU*) (See section 6.3).
- Size, type, length and location of the proposed forcemain;
- Calculation of static or geodetic head;
- Calculation of hydraulic system headloss using Hazen Williams formula (C=120);
- Calculation of total dynamic head loss (i.e. geodetic head plus hydraulic system head loss);
- A copy of pump manufacturer's pump curve, motor size, and impeller number. Include power requirements, rated speed, and pump efficiency. Plot the hydraulic system curve on to the pump curve;
- Calculation of velocity in the forcemain. The entire length of forcemain shall be flushed a minimum of once per day during projected average day flows. If one flush ever twenty-four hours is impractical then odour issues must be mitigated with an acceptable odour control plan;
- Calculation of sump volume between pump cycles. The sump shall be capable of accommodating peak day flow for a minimum of 15 minutes. Where flooding could adversely affect the environment, an overflow tank shall be provided to accommodate 2 hour detention capacity during peak day flows;
- Calculation of the number of pumps starts per hour during average and peak day flows. Indicate the maximum number of pumps starts per hour per the manufacturer's specifications. The minimum pump run time shall not be less than 2.5 minutes;
- Vessel buoyancy calculations (based upon maximum flood elevations);
- The impact on neighbouring properties with respect to aesthetics, *Landscaping* requirements, noise, and odour;
- Access for construction and maintenance. Assume minimum H-20 loading requirements and parking and turning of maintenance vehicles;
- A geotechnical report indicating existing ground conditions, de-watering requirements, blasting, or any other anomalies that may affect the design and construction of the proposed pump station and forcemain;
- Access to a proposed or existing power supply. A review and recommendation of standby power requirements shall be included;
- A preliminary cost estimate (Class C) of all associated *Works and Services*; and

- All sanitary pump stations that will be turned over to, serviced and/or maintained by the *City* must be located within an *SRW.*
- Constructing pump stations within the *Road* allowance may be permitted if in *City Engineer*'s opinion, other locations within an *SRW* are infeasible.

7.2 General Requirements

7.2.1 Upon approval of the pre-design report, the *Consulting Engineer* may proceed with detailed plan/profile construction drawings in accordance with the *City*'s Engineering Standards and Specifications.

7.2.2 Drawings shall include:

- Site plan
- Plan of the station
- Side view section of the station
- Front view section of the station
- Pump/system curve
- Pre-set pump levels
- Mechanical Details
- Relevant technical elevations and grading plan
- Electrical schematic drawings
- Plan and profile of the forcemain
- Every station shall be a wet well type with duplicate submersible sewage pumps (or approved alternate).
- Unless otherwise approved by the *City Engineer*, the pump system shall be Xylem/Flygt "N" Series as manufactured by Xylem Canada complete with a Landia Pod submersible mixer or equal. Pumps must be set up to operate automatically in alternating sequence. Pumps shall be capable of handling raw, unscreened sewage.

7.3 Pumps and Motors

7.3.1 All pumps and motors must meet the following requirements:

- A minimum of two pumps shall be installed in each *City*-owned pump station. For duplex pump stations, each pump shall be capable of pumping peak hourly flows with one pump out of service. For larger pump stations, the ability to pump the peak hourly flow rate shall be provided with the largest pump out of service.
- The *City* prefers variable speed pumps, but may accept constant speed pumps with soft start in situations where they offer obvious advantages over the variable speed pumps.
- Pumps shall be a submersible, explosion proof, non-clog, solids-handling type, capable of passing spherical solids up to 75 mm in size;
- Pump suction and discharge openings shall be a minimum of 100 mm diameter;
- Pump impeller, volute, motor, discharge elbow and seal housing to be high quality Hard-Iron complete with "N-impeller" and "Chopper" insert ring where applicable;

- Pumps shall have double mechanical seals, replaceable wear rings where applicable, and removable inspection ports;
- Pumps must be capable of operating dry without damage;
- The motors must be capable of operating 10 spaced starts per hour and shall conform to CSA and EEMAC standards;
- Motors shall have an automatically resetting, embedded temperature sensing device to protect against overheating;
- Motors shall have a loss of seal sensor to protect the motor from damage due to loss of seal;
- Pump motor shaft, all exposed bolts, and motor information plate to be stainless steel;
- All relevant pump, motor, and impeller information shall be stamped on the plate and permanently attached to the pump with a second plate installed inside the Kiosk;
- Bearings shall be factory lubricated with an operating life of not less than 70,000 hours;
- All rotating parts shall be balanced to provide minimum vibration under service conditions;
- Power cables shall be fully weather proofed and sized to match the pumps supplied. Cables to be continuous from the vessel to the kiosk. In no instance shall a cable be spliced; and
- Pumps shall be shop primed and painted with a minimum of 2 coats of coal tar epoxy upon installation and where applicable.

7.4 Wet Well Design

7.4.1 The sizing of the wet well is dependent on whether the pump drives are variable speed or constant speed.

7.4.2 Where variable speed pumps are used, the “firm capacity” of the pump station (i.e., the capacity of the pump station with the largest capacity pump out of service) is used for wet well design.

7.5 Vessel

7.5.1 All vessels shall meet the following requirements:

- Filament wound reinforced fiberglass or steel reinforced concrete and completely watertight;
- Walls and floor shall be painted with 2 coats of epoxy enamel (2 components), white in colour, and shall have a smooth glass like finish;
- Intermediate platforms are required when the depth of the vessel exceeds 4 meters. Platforms shall consist of aluminum grating with removable sections above the pump units to facilitate pump removal;
- Bottoms shall be sloped towards the pumps to prevent solid deposition;
- A Marine Grade Aluminum access ladder is required complete with “ladder-up” support, (per Bilco style) shall extend to the bottom of chamber is required. The “ladder-up” support must be provided if the ladder does not extend above entrance when the hatch doors are open;
- Where the frame meets concrete, there shall be double leaf aluminum watertight access hatches complete with safety grating stainless steel hold open mechanism, lift assist, stainless steel tamper proof hinges, recessed lockbox for padlock. Hatches shall be fitted with stainless steel hinges and capable of supporting the weight of each pump. Each hatch must be secured

with a standard 50 mm laminated Master padlock. A mechanism must be provided for securing hatch lids in the open position to prevent accidental closing;

- The top shall be set 0.5 m above the final ground elevation; and
- The vessel shall be tested for water tightness using *Infiltration*/exfiltration methods (depending on water table level) prior to the installation of the pumps, pipe work and/or electrical works.

7.6 Piping and Accessories

7.6.1 The following piping and accessories are required:

- Piping shall be Stainless Steel ASTM-A312 or ASTM-A778 Type 316L surface finish to AWWA C220.
  - Minimum wall thickness:

    50 mm and less – Schedule 5S

    63 mm and larger – Schedule 10S
  - Operating pressure rating: 1035 kPa
  - Vacuum rating: 100 kPa
- Shall be longitudinally welded by Tungsten Inert Gas or Metal Inert Gas method.
- All fittings shall be stainless steel;
- All mechanical fittings and couplings (excluding flanged joints) shall be located above the intermediate platform (where applicable);
- Two guide bars shall be installed for each pump to facilitate removal and installation without disturbing the discharge piping. Each pump shall be supplied with stainless lifting chains;
- Check valves and eccentric isolation gate valves shall be supplied for each pump;
- Check valves shall be outside lever and weight, non-clog type, with cast iron body (Class 125), and shall be mounted in the horizontal position in a separate valve chamber adjacent to wet well;
  - Acceptable product: Tidexflex CheckMate or equal complete with two 304 stainless steel expansion clamps;
- ~~Check valves shall be located in a separate valve chamber adjacent to wet well~~;
- Combination Air Valves shall be Val-matic 801 c/w backwash accessories & isolation valve or reviewed alternative;
- Plung Valve:
  - Dezurik, Val-matic or reviewed alternate
  - Cast iron body,welded nickel seat
  - Plug Buna-N coated
  - Telfon thurst washers
  - Manual valve actuator shall be as follows:
    - Sizes 100 mm and smaller – provide hand lever
    - Sizes 150 mm and larger – totally enclosed, grease packed gear actuator c/w position indicator and hand wheel.

- A Forcemain Bypass shall be installed (see standard drawing);
- A Bypass Outlet Port shall be installed for back-up pumping (see standard drawing);
- Inline duct mounted supply explosion proof ventilation fan - a Marc Climate Control Inc #ISFX160 or reviewed alternate;
    - Ducting capable of providing a minimum of 30 air changes per hour is required. Air shall be forced into the wet well with adequate exhaust vents to allow displaced air to escape;
- Vents shall be a minimum 150 mm diameter goose neck stack extending a supports and bollard protection if necessary;
- A two-speed fan shall be located in a separate, isolated compartment in the kiosk and ducted to the wet well. The fan shall operate at low speed continuously. There shall be no exchange of air between the fan compartment and the remaining portion of the kiosk. A fan high/low speed switch shall be provided on the control panel;
- There shall be a minimum 32 mm diameter water service. See Section 15.4 of this Design Criteria Manual for the related Supplementary Specification Drawings.
- The wet well shall have an explosion proof light controlled within the kiosk;
- A portable, heavy duty, explosion proof trouble light shall also be provided and stored inside the kiosk;
- Provision(s) shall be made for standby pumping from an external source via a 150 mm rigid corrosion proof pipe extending down to center line of pump body. Connection shall be an adaptor flange with 150 mm diameter female Kamlock quick coupling and lockable lid (see lift station standard drawing includes double block and bleed on the forcemain);
- A Davit Arm compatible with the *City*'s portable lifting device shall be incorporated into the design of the pump station by way of an overhead rail system to facilitate the removal and installation of the pumps.
- For proposed *City*-owned and operated pump stations, a 2.4 meter high black chain link fence shall be installed around the pump station site complete with privacy slats or approved alternate privacy screen;
- *City*-owned pump stations shall include an asphalt driveway constructed up to and beside the pump station to allow service vehicles to park off the street while conducting maintenance, repairs, alterations etc. Also, sufficient space shall be provided for turning and maneuvering of standby generator and tow vehicle;
- The area adjacent to and to a minimum of 1.5 m surrounding the kiosk and vessel shall be free draining and covered with a 300 mm layer of 19 mm clear crush gravel and a 100 mm asphalt surface;
- Removable steel bollards or concrete no-post barriers shall be installed around the pump station to prevent vehicles from driving over top of the vessel; and
- Inlet to the vessel shall be by gravity to avoid creating turbulence within vessel and shall also be located to direct flows away from level controls.

7.7 Electrical Supply and Controls

7.7.1 All electrical components shall meet the following requirements:

- The power supply to the kiosk shall be by underground dip from the nearest convenient source. Pumps larger than 5 hp shall be 600 volt, 3 phase power;

- The control kiosk shall be a factory-built enclosure manufactured to EEMAC 3R construction with rain gutter all-around weather-proof standards and shall be pre-wired, inspected and approved by the BC Electrical Safety Inspection Branch;
- The kiosk shall be constructed from #5052 marine-grade aluminum with continuous weld, ground smooth, rounded corners, and have grease able hinged doors for the control and service entry sections. The exterior walls and ceiling shall be fully-insulated with 11/2' foilbacked fiberglass insulation. All insulation joints and exposed edges shall be neatly covered with foil tape. Insulation shall be mechanically fastened. Kiosk shall be sized so as to provide shelter for one technician complete with rain gutters on all sides;
- The kiosk shall be factory primed and power coated in tan brown. For *City*-maintained pump stations, the doors shall be secured by means of a standard 50 mm laminated padlock supplied by the *City* at cost to the *Applicant*;
- The kiosk shall be bolted onto a concrete pad. The concrete pad shall not be placed over top of the water service, forcemain, or gravity sewer main;
- The contractor shall make arrangements for *City* staff to shop inspect the kiosk prior to the kiosk being delivered to the site at no additional cost to the *City*;
- The level controls shall be ultrasonic type (Millitronics, Multiranger or approved alternate). Ultrasonic level control sensors shall be mounted near the top of the vessel inside a stilling well, which extends to within 0.3 m of the high water level;
- The level controls shall be set to **start** the **lead pump** upon rise in liquid level to a pre-set elevation as approved by the manufacturer;
- The level controls shall be set to **stop** the **lead pump** at a pre-determined low level elevation as approved by the manufacturer or the *City*;
- The **lag pump** shall set to **start** when the liquid level rises to the second pre-set elevation, as approved by the manufacturer and both pumps shall operate until the pre-determined low level elevation, as approved by the manufacturer is reached, and then both pumps would stop simultaneously;
- An alarm level shall be set at a pre-determined level above the start level of the lag pump. There shall be a minimum of 150 mm between pre-set elevations. The alarm level shall be below the invert of the inflow pipe. The pre-determined alarm level shall be approved by the *City Engineer* if this is a *City* operated pump station;
- The pumps shall alternate starting sequence following each full pump cycle. Alarms shall be telemetered to the *City*'s SCADA monitoring system;
- A ball float (Xylem or approved alternate) shall be installed as a backup for high level alarm, which also starts a pump for 5 minutes;
- A ball float (Xylem or approved alternate) shall be installed for low level alarm to stop the pumps in case of foam impacting operation;
- An LED light shall be mounted on the roof of the kiosk or SCADA pole for site illumination;
- A streetlight pole complete with a motion sensor and photocell shall be installed within close proximity to the pump the pump station.
- The operator should be able to start either pump manually if necessary;
- Electrical equipment inside the kiosk shall include a main breaker panel, hydro meter, manual transfer switch, emergency power receptacle, overload switch between the receptacle transfer switch (depending upon amperage), pump control panel, smart remote telemetry unit, fiber

optic, across-the-line magnetic starters, control transformers, 120 volt receptacle, on-off switch for ventilation fan, elapsed time totalizer for each pump, current-limiting motor protection, lightning protection, ammeter for each pump, HOA selector switches and run lights for each pump, heater for cold weather, and a cooling fan for hot weather and LED cabinet lighting. All switches, panelboards, control panels and equipment shall be identified with engraved 3-ply lamacoid nameplates, white with black lettering.;

- RTU shall be a programmable SCADAPAC 32 (or approved alternate) complete with intelligent protocol and operator interface (HMI) mounted within a cabinet located adjacent to the control panel. Alarm contacts for power failure (as detected by a phase monitor and auxiliary relay), high-level and low-level overload for each pump, seal leak alarm or indicator for each pump, motor high-temperature for each pump and starter auxiliary contact for each pump;
- Generator receptacle shall be Crouse-Hind (or approved alternate) and shall be compatible with those connectors now used on the *City*'s portable generator;
- The fiber optic shall be compatible with the *City*'s SCADA system. A radio antenna shall be mounted on a streetlight pole adjacent to the kiosk. The size of the streetlight pole and antenna will be dependent upon each individual location and confirm radio path. All poles shalt be furnished with a 87W, 5000K, 7127 lumens, 50,000 hours, LED outdoor flood light with die-cast aluminum housing directed towards the wet-well and switched in the kiosk (or approved alternate);
- All work shall conform with the latest edition of the *BC Electrical Code*.
- Unless otherwise approved by the *City Engineer*, include two flow meters (Endress Hauser or approved equivalent), one on each forcemain, complete with remote head on panel;
- Permanent standby generators with automatic transfer switches shall be provided for all pump stations servicing residential (single and multi-family) *Subdivisions/Developments*. Standby generators used for other back up power requirements may also be used for the sewage pump station; and
- Generators shall be specified and approved by the *City Engineer*. Generators are to be mounted on a concrete base complete with a fabricated cage constructed of 50 mm diameter schedule 40 galvanized steel tubular members mounted around the generator to prevent theft. Where the generator is adjacent to residential *Subdivision/Development*, the generators overall operating noise level shall be less than 65dbA when measured at a distance of 6 meters from any side of the enclosure and 1 meter above ground. Generators must meet the most current emission standards as adopted by the *Canadian Environmental Protection Act 1999 (CEPA 1999)* for Off-*Road* Compression Ignition Engines.

7.8 Forcemains

7.8.1 In conjunction with sanitary pump stations, the following criteria shall be used in the design of forcemains:

- Unless otherwise approved by the *City Engineer*, all *City*-owned forcemains shall be twinned with one forcemain serving as a standby unit. Each forcemain shall be capable of carrying peak flow rates.
- The lowest pump delivery rate anticipated shall occur at least once per day, a scouring velocity of at least 0.9 meters per second shall be maintained and maximum velocity of flow in the main shall not exceed 3.0 meters per second;
- An automatic duplex air-relief valve, specifically rated for sanitary sewage services, shall be placed at regular intervals and at all local high points in the forcemain to prevent air locks;

- Discharge into the gravity sewer system shall be ramped to avoid turbulence;
- The minimum size of forcemains shall be 100 mm diameter unless otherwise approved by the *City Engineer*;
- Valves shall be at maximum intervals of 1,000 meters or at points where the forcemain makes abrupt changed in profile (e.g., creek crossings);
- Line valves shall be located as directed by the *City Engineer* and on both sides of railway crossings and creek crossings.

7.9 Commissioning of Equipment

7.9.1 When all mechanical and electrical equipment has been completed, adjusted, and tested, the *Consulting Engineer* shall verify the proper operation of the pumping station over a minimum of three pumping cycles (for each pump). The test shall include a normal pumping cycle, combination lead and lag pump cycle, and high level alarm situation. The pump capacities for each situation shall be measured and recorded. The *Contractor* shall co-ordinate an inspection and supervision of start-up by the equipment supplier. The measured pump capacities shall be noted on the record mechanical drawing (i.e., As-Built). A separate test shall be performed with the BC Hydro power switched off and the controls connected to a standby generator unit.

7.10 Documentation

7.10.1 Prior to construction, the *Consulting Engineer* shall submit 2 sets of signed and sealed mechanical drawings to the *City* for review and comment.

7.10.2 Prior to requesting *Final Acceptance*, the *Consulting Engineer* shall:

- Review and approve the *Contractor*'s supplied Operations and Maintenance (O&M) manual which contains the following:
  - Title page with project name, date, *Contractor*, *Consulting Engineer*;
  - Table of Contents;
  - Descriptive and technical data;
  - Maintenance and operating instructions for all mechanical and electrical equipment;
  - Manufacturer's catalogues for all mechanical and electrical equipment;
  - Electrical wiring schematics and coding and a copy of the final accepted electrical inspection report from Technical Safety BC;
  - List of parts for all equipment including part numbers, addresses of sales, service representatives and suppliers;
  - Motor list detailing motor number, name, horsepower, pump name plate, current rating, current being drawn;
  - Heater size and type;
  - Copy of written certification by the supplier that the equipment is installed and operating in accordance with the manufacturer's standards;
  - Signed and sealed mechanical and electrical record drawings (i.e., As-Built);
  - Emergency operating procedures;
  - Measured pump capacities during the commissioning of the equipment; and

- Submit 3 copies of the O&M manual in a hard-covered binder to the *City Engineer*.

SECTION 8.0 – Roadways

This Section provides criteria and guidelines for planning and designing of transportation infrastructure, including but not limited to *Roads*, intersections, access, pedestrian/cyclist facilities, pavement structure, and traffic control.

8.1 General Requirements

8.1.1 *Roadway* design shall conform to these Engineering standards or as otherwise accepted by the *City Engineer*. Principles of design shall also conform to the following guidelines:

- The City of Langley Master Transportation Plan;
- Geometric Design Guide for Canadian Roads (*TAC*);
- Manual of Uniform Traffic Control Devices for Canada (published by *TAC*);
- Ministry of Transportation & Infrastructure (MOTI) "BC Supplement to TAC Geometric Design Guide";
- Institute of Transportation Engineers Guidelines (ITE), and
- *MMCD*, as amended from time to time.

In the event of a conflict between the criteria set in this Design Criteria Manual and the above guidelines, this Design Criteria Manual will take precedence.

8.2 *Roadway* Classifications

The *Road* classifications in the *City* are based on a hierarchy of street classifications differing in functions, traffic services and volumes. The typical characteristics of each type of *Road* class are shown in the following Table, although there may be some variations in the actual characteristics of certain *Roads*.

***Road* Classification Guidelines**

Characteristic	*Road* Classification		
	Arterial	***Collector***	***Local***
Expected Traffic Demands (veh./day)	5,000 +	1,000 – 8,000	< 1,000
Traffic and Connectivity	Regional and cross-town traffic connecting to major destinations and highways/expressways	Neighbourhood traffic connecting to *Arterials*	Local traffic connecting to individual properties and *Collectors*
Typical Travel Lanes	2 - 4 lanes plus turn lanes at intersections	2 lanes plus turn lanes at intersections	1 – 2 lanes
Property Access	Limited	No limitations	No limitations
Intersection Controls	Generally, traffic signals or roundabouts	Generally, traffic signals, stop controlled or roundabouts	Stop controlled or traffic circles
Transit Services	Yes – primary and local transit	Yes – local transit	No
Typical Intersection	400 m	150 - 200 m	60 m

Characteristic	*Road* Classification		
	Arterial	***Collector***	***Local***
Spacing			
Sidewalks	2 sides	2 sides	2 sides*
Parking Restrictions	Prohibited	Few restrictions other than peak hour	No restrictions or restrictions on one-side only.
Road Allowance Widths (m)	24 - 30	19.5 – 23	15 - 20

*- Unless otherwise approved by the *City Engineer.*

~~8.2.1 The *Developer* and/or their *Consulting Engineer* shall confirm with the *City Engineer*, the appropriate *Roadway* classification within or adjacent to the proposed *Subdivision/Development* in order to establish appropriate *Road* allowance widths and *Roadway* design.~~

~~8.2.2 Dedications by the *Developer* shall be dependent on the ultimate design of the *Roadway* within each *Roadway* classification and the ability to provide Works and Service as defined by the *City Engineer*, and this Design Criteria Manual.~~

8.2.3 Standard offsets for utilities and other services are shown on the typical cross-sections in the Section 15.4 of this Design Criteria Manual. When existing utilities do not match the typical cross-section off-sets, or will not permit the use of a typical cross-section, the *Consulting Engineer* shall confirm an alternate design with the *City Engineer* at a pre-design meeting and prior to submission of design drawings. The *Applicant* may be required to provide further dedication or provide statutory rights-of-way in order to accommodate ultimate designs that include *Landscaping* and franchise utilities.

8.3 Design Elements

8.3.1 The *City* requires conventional grid networks that are structured by parallel and perpendicular streets with multiple intersections. The *City Engineer* may approve alternative street patterns only when the *Consulting Engineer* demonstrates, to the satisfaction of the *City Engineer*, that the proposed street pattern is in response to the site constraints.

8.3.2 Cut-through paths, where in the opinion of the *City Engineer* are feasible, shall be provided at the end of *Cul-de-sacs* or when streets do not intersect perpendicularly to create shorter and direct routes. These cut-through paths shall serve as active travel routes and make travel by walking and cycling more convenient and comfortable. Cut-through paths shall use bicycle baffles at both ends per *MMCD* standards.

8.3.3 See typical cross sections shown in Section 15.4 (Supplementary Specifications Standard and Detail Drawings) in this Design Criteria Manual to determine an appropriate design cross section for all *Road*s associated with the *Subdivision/Development*. Dedication and *SRW* requirements for all *Roadway*s within and adjacent to a *Subdivision/Development* shall be approved by the *City Engineer* prior to design.

8.3.4 Dedication and *SRW*

- The *Applicant* shall dedicate and provide sufficient *Highway SRW* ~~*Road*~~ allowance to accommodate all *Works and Services* required to service the proposed *Subdivision/Development*.

- *Road* cross sections shall be designed to accommodate all relevant features including appropriate *Roadway*, *Sidewalks*, fire hydrants, ornamental streetlights, traffic signals, overhead or underground power and telecommunications plant including service boxes, junction boxes and kiosks, gas mains, water meter boxes, street trees and street/traffic signs postal kiosks and bus-stop shelters. Extended *SRW* may be required if all relevant features do not fit within the designated *SRW* noted in section R of the standard drawings as applicable.

8.4 Geometric *Road* Design Standards

Geometric design is an important aspect of *Roadway* design as an appropriate and consistent *Roadway* alignment that meets a driver's expectations can improve safety.

8.4.1 Gradients

- Maximum and minimum gradients for *Roadways* shall be as shown in Table 8.1.
- Where topographical constraints restrict the attaining of the required *Road* grades, the *City Engineer* may approve variations to the limits set in Table 8.1. The *Consulting Engineer* shall be required to supply to the *City Engineer* all information pertinent to their request including traffic studies, sight line and stopping distance calculations, proposed design restrictions, etc.

Table 8.1: Design Standards

Classification	Typical Design Speed	Grade %	
		Min	Max[1,2]
Arterial Road	50	0.5	8
Collector Road	50	0.5	10
Local Road	50	0.5	12
Lane	30	1.0	12
Alternate Access	30	1.0	12
Driveway Multi-Family		0.5	12
Driveway Single-Family		0.5	12
Walkway		1.0	15
Trails[3]		1.0	20

1 Maximum grades approaching intersections are 2% less than indicated. Reduction applies for length equal to stopping sight distance.
2 Reduced maximum grades are recommended for hillside *Subdivision/Developments* where frost or icy conditions may be present.
3 Refer to City of Langley "Parks, Recreation and Culture Master Plan".

8.4.2 Cross Slopes and Super-elevation

- The cross slopes (or cross falls) for all *Roadways* are typically 2.5%, but shall not be less than 2.0% nor more than 4%. The crown of the *Roadway* shall be at the centerline of the *SRW* unless otherwise approved by the *City Engineer*.

8.4.3 Horizontal Curves

- Horizontal curves shall be designed in accordance with the TAC Geometric Design Guide for Canadian *Road*s.

8.4.4 Pavement Tapers

Pavement tapers shall be used to connect the end of new *Road* construction to the existing *Roadway*.

- At the limits of new *Roadway* construction, appropriate tapering of the pavement thickness shall be implemented to match the pavement structure of the existing *Roadway*.
- Unless otherwise specified by the *City Engineer*, tapers shall be:

***Highway* Classification**	**Direction of Taper**	**Taper (length : width)**
Local Roads	Widening in direction of Travel	10:1
	Narrowing in direction of Travel	20:1
Collector Roads	Widening in direction of Travel	10:1
	Narrowing in direction of Travel	30:1
Arterial Roads	Widening in direction of Travel	30:1
	Narrowing in direction of Travel	30:1

8.5 ***Road* Intersection Design**

8.5.1 Design vehicle dimensions and operating characteristics affect the physical *Roadway* infrastructure and their impacts shall be appropriately considered in the geometric design of *Roads*. Characteristics such as vehicle size and weight, sight distance, horizontal and vertical curve design, cross-section design, intersection design, and traffic operational quality is critical to assess *Highway* performance, particularly when trucks constitute a significant portion of the vehicle mix.

8.5.2 Alignment

- Intersections shall be designed at right angles, or as close as possible. Additionally, a minimum 20 m tangent shall be provided at all intersection approaches. Intersections proposed on curves or near the crest of hills are to be avoided. These proposed intersections are subject to sight line analysis in accordance with *TAC*.
- Where practical, profiles on the approach to an intersection shall be flattened for a minimum distance of 20 m back from the cross street to facilitate a smooth crossing. Where signalization is planned or anticipated in the future, cross slopes on through streets shall be reduced to between 0.5-1.5% within the intersection.

8.5.3 At intersections a constant grade through the intersection is required. The through grade of the major *Roadway* shall be predominant. The maximum grade and minimum length of the constant section through the intersection shall be as noted below:

Predominant *Roadway*	**At Intersection with**			
	Collector Roads		***Local Roads***	
	Max. Grade	**Distance**	**Max. Grade**	**Distance**
Arterial Roads	6%	60 m	n/a	n/a
Collector Roads	8%	60 m	8%	30 m
Local Roads	n/a		8%	30m

Note: Distances are measured from the end of the approach vertical curve (EVC) to the beginning of the departure vertical curve (BVC) and are to be centered on the center of the intersecting streets.

	At Intersection with		
	***Arterial* Roads**	***Collector* Roads**	*Local* ***Roads***

Non-predominant *Roadway*	Max. Grade	Distance	Max. Grade	Distance	Max. Grade	Distance
Collector Roads	4%	15 m	4%	15 m	n/a	n/a
Local Roads	4%	15 m	4%	10 m	4%	20 m

Note: Distances are measured along the non-predominant *Roadway* from the ultimate near curb line of the predominant *Roadway* to the beginning of the vertical curve (BVC).

8.5.4 Curb Returns

- The *Consulting Engineer* shall take special care in the design of curb returns at intersections with steep gradients. The maximum gradient around curb returns from one street to another shall not exceed 12%, or 1.5 times the grade of the major street, whichever is less.
- For intersections at angles other than 90°, traffic movement shall suit the appropriate design vehicle turning radius, as determined by the *Consulting Engineer* and approved by the *City Engineer.*
- Maximum allowable curb returns radii are shown in the following Table.

Maximum Allowable Curb Return Radius (m) at Different Intersection Types

Road Class	*Arterial*	*Collector*	*Local*	*Lanes*	*Industrial*
Arterial	11.0	10.0	9.0*	8.0*	11.0
Collector	10.0	10.0	8.0	7.0	11.0
Local	9.0*	8.0	7.5	7.0	11.0
Lanes	8.0*	7.0	7.0	7.0	11.0
Industrial	11.0	11.0	11.0	11.0	11.0

*- Allowable intersection type only when approved by the *City Engineer.*

- There is an unavoidable trade-off between pedestrian safety and traffic speeds, and the turning radius forms the balance point between these priorities.
  - The *Consulting Engineer* shall demonstrate the designed curb radius would allow for safe turning movement of the design vehicle (e.g., recycling and waste collection trucks, where applicable).
  - The *Consulting Engineer* shall make every effort in designing the curb return radius to lower the design vehicle turning radius to accommodate specific site conditions and/or to improve pedestrians and cyclists' safety.

8.5.5 Maximum Grade of centerlines crossing at Intersections

Roads	**At Intersection With**					
	Arterial Roads		***Collector Roads***		***Local Roads***	
	Max. Grade	**Distance**	**Max. Grade**	**Distance**	**Max. Grade**	**Distance**
Arterial	Site specific		Site specific		n/a	

Collector	5%	60 m	6%	30 m	***per City Engineer***	***per City Engineer***
Local	*n/a*	n/a	6%	30 m	***Per City Engineer***	***Per City Engineer***

Note: Distances are measured from the end of the approach vertical curve (EVC) to the beginning of the departure vertical curve (BVC).

8.5.6 Corner Cuts

- *Road* allowance corner cut dedications shall provide sufficient space to accommodate the required curb return radius. Unless otherwise required by the *City Engineer*:
  - A minimum corner cut of 4 m X 4 m is required in all intersections.
  - A minimum 5 m x 5 m corner cut shall be required at signalized intersections and/or whenever the *City* anticipates installing a traffic signal.
  - A corner cut larger than 5 m x 5 m shall be required where a future roundabout installation is planned.

8.5.7 Channelization

- The *Consulting Engineer* shall make every effort to avoid using channelized right-turn lanes when designing roadways to decrease vehicle turning speed and increase pedestrian safety.
  - If a channelized right-turn lane is proposed, the *Consulting Engineer* shall demonstrate, to the *City Engineer's* satisfaction, why having a channelized right-turn lane at the project area is required and/or is a more suitable option.
- When approved by the *City Engineer*, left turn/right turn Channelization details shall be designed in accordance with the TAC Geometric Design Guide.

8.5.8 Left-Turn Bay Design

- Left-turn bays shall be designed in accordance with the TAC Geometric Design Guide. The *City Engineer* may require, opposing left-turn bays be provided, when feasible.
- Unless otherwise approved by the *City Engineer*, for signalized intersections, the minimum storage length for a left-turn bay is 30 m.

8.5.9 Roundabouts

- The *City Engineer* may require single or multiple lane roundabouts as alternatives to other types of intersection traffic control. Roundabout designs shall be in accordance with the TAC Canadian Roundabout Design Guide. The design shall include analysis to ensure suitable capacity, level-of-service, queue lengths, vehicle deflection, design speeds, etc.

8.5.10 Traffic Circles

- Traffic circles are a form of intersection control and a traffic calming device that is applicable to *Local Roads* only. It has a small raised island located in the center of the intersection that requires vehicles to yield on entry into the intersection. The *City Engineer's* approval shall be obtained before the installation of a traffic circle.

8.5.11 Sight Distance

- Provision of intersection sight distance is desirable as it provides sufficient time for vehicles to safely cross, enter or exit an intersection. Intersection sight distance shall be calculated using

the information provided in the TAC Geometric Design Guide. If intersection sight distance cannot be provided then at a minimum, sufficient stopping sight distance must be provided for a driver to negotiate the potential conflict safely.

8.5.12 Access Location, Management and Spacing

- Access management is the application of spacing and designing median openings, intersections, and driveways. The objectives of access management are to provide efficient and safe movement for all travel modes and allow for reasonable access to adjacent land-use.
- Driveways shall be located so that they do not unreasonably increase conflicts with pedestrians and cyclists, compromise transit operations, and decrease safe vehicle operations. When properties front multiple *Roads* with different *Road* classifications the driveway shall be located on the *Road* with the lowest classification.
- The minimum distance between the near side of the driveway and the ultimate property line of the intersecting street, or the near side of another driveway, shall conform to the following minimum driveway spacing requirements:

***Road* Classification**	**Minimum Spacing**
Arterial Road	50 m
Collector Road	25 m
Local Road	9 m
Lane	9 m

8.6 ***Roadway* Lengths**

8.6.1 *Cul-de-sacs*

- For newly created *Highways* the maximum permitted center-line length of permanent dead-end *Roadways* shall be:

Type of Land Use	**Maximum Centerline Length (m)**
Residential	200
Industrial	110
Commercial	110
Institutional	110

In situations where these lengths are to be exceeded, consultation with, and approval from the Fire Department and Engineering Services is required. Additional works such as alternative means of access/egress or turnarounds is required.

- For all permanent dead-end *Roadways*, a *Cul-de-sac* or turnaround as per the scheduled drawings within this Design Criteria Manual is required.
- The centerline length shall be measured from the centerline of the intersecting *Roadway* to the 'throat' of the *Cul-de-sac* bulb or the end of the turnaround.
- Topographic or traffic generation considerations may warrant variations to the maximum length at the discretion of the *City Engineer*.

8.6.2 Future Through *Road*/Temporary Dead-End

- Temporary dead-end *Road*s shall use 12 m radial or hammerhead type turnarounds as per standard detail drawings. The turnaround shall be within the dedicated *Road SRW* or on statutory *SRW* as required.

8.7 Alternate/Emergency Access

8.7.1 Alternate Access is constructed for the use of emergency vehicles or for other vehicles under emergency conditions only. It shall not be open to traffic other than pedestrians unless conditions warrant its use under emergency situations. Wherever possible Alternate Access, whether temporary or permanent is required it shall:

- Be a minimum 6 m wide and conform to the appropriate standard drawing;
- Be designed for H-20 loading;
- Be within a registered *SRW* or dedicated *Road SRW*; and
- Be gated per Section 15.4 of the standard drawings in this Design Criteria Manual;

8.7.2 Where Alternate Access is permanent; it shall be as above and also:

- Be fenced complete with appropriate barricades; and
- Have a streetlight at the entrance and exit to the intersecting streets.

8.8 Structural Considerations

8.8.1 Cuts and Fills

- *Boulevards* shall be graded at positive 2% from back of Curb, *Sidewalk*, or *Swale* to property line. Cut and fill slopes beyond property line shall be a minimum of 2% and a maximum of 2H:1V and shall project to meet existing grades.

8.8.2 *Retaining Walls* supporting municipal works

- Wherever the side slopes beginning at a point 600 mm from the back of the *Sidewalk* create a depth of vertical cut or fill at the existing property line in excess of 600 mm at 2H: 1V slope, a concrete *Retaining Wall* shall be constructed unless otherwise permitted by the *City Engineer*. *Retaining Wall*s, if required, shall be adequately drained, contain a vehicle and pedestrian access to each property, and be equipped with railings.
- *Retaining Wall*s within a *Road SRW* are not permitted unless approved by the *City Engineer*.
- Materials to be used for *Retaining Wall*s must be approved by the *City Engineer*. (i.e., the use of treated wood timber or railway ties is prohibited).
- The use of *Retaining Wall*s to contain *Road* cuts and fills is permitted the following conditions:
  - The approval of the *City Engineer*;
  - The *Retaining Wall* being located on private property;
  - Submission of geotechnical reports detailing soil analysis to support designs and type of construction, base, backfill, and drainage; and
  - The *Retaining Wall*s on private property are designed, and certified for geotechnical and structural aspects by the *Consulting Engineer*. A *Building* Permit is to be issued prior to construction of the *Retaining Wall*s with over 1.2 m in height. A *Building* Permit application shall consist of sealed drawings, and the appropriate letters of assurance from the “BC Building Code”. Sealed drawings for railings and guards on top of the *Retaining Wall*s may be required as needed.

- When required, the *Retaining Walls* at all *Subdivisions* shall be constructed at the *Subdivision/Development* stage.

8.9 *Road* Base and Pavement Design

8.9.1 The structural design of the *Arterial Road* pavement shall be adequate for a minimum of 20 year life cycle, whereas *Collector* and *Local Roads* shall be adequate for a minimum of 30 year life cycle.

- Where applicable, actual truck volume counts and projections will be used to determine the required design life.
- The *Consulting Engineer* shall specify *Road* base and depth of asphalt to be used for all *Roadway* designs in the *City*.
- A geotechnical report shall be submitted with any *Roadway* design, confirming the structural adequacy of any existing *Roadway* and/or new *Roadway* being constructed by the *Applicant*.

8.9.2 New *Road* Construction

- The design of new *Roads* shall be based on the results of the analysis of materials from test holes dug on the proposed *Road* site at representative intervals, or by the California Bearing Ratio (CBR) asphalt pavement design method.
- Test holes and samples shall be undertaken by a qualified soils test company and all reports shall be signed and sealed by a qualified Geotechnical Engineer.
- Where the Benkelman Beam design method is used, the Maximum Seasonally Adjusted Design Deflections (mean plus two standard deviations) shall be as follows:

Classification	Minimum Sub-base Course Thickness (mm)		Minimum Granular Base Thickness (mm)	Minimum Asphalt Thickness (mm)		Maximum Seasonally Deflection (mm)	
	Clay Areas	Sandy Soils		Base Course (1st Lift)	Surface Course (Top Lift)	Base	Pavement
Arterial	450	300	150	75	50	1.45	0.75
Collector	450	300	150	50	50	2.10	1.15
Local	450	300	150	40	40	2.60	1.50
Lane	450	300	150	75	--	3.10	1.50
Industrial	450	300	150	50	50	1.75	1.00

Note: (1) Recommended sub-base and base thicknesses are minimum requirements only. Site conditions may dictate greater thicknesses of granular material to achieve design rebound.

(2) Where rebound readings are greater than the design reading for the base course. The subgrade shall be investigated for potential weakened areas.

(3) For *Arterial Roads*, Superpave shall be used as per the latest edition of *MMCD*.

- Porous Asphalt designed by a qualified *Consulting Engineer* may be accepted at the discretion of the *City Engineer*.

8.9.3 Existing *Roadway* Upgrading

- Existing *Roadway* re-construction designs, including asphalt overlays, shall be based on recommendations of a Geotechnical Engineer and final approval of the *City Engineer*. A report shall be submitted to the *City* including the results of Benkelman Beam tests and evaluation of test holes to establish design parameters.

8.10 *MUP* Base and Pavement Design

Unless otherwise specified by the *City Engineer*, *MUP* base and depth of asphalt shall have specifications as outlined in Section 15.4 of this Design Criteria Manual.

8.11 Paving

8.11.1 Paving Materials

- The standard paving material in the *City* is hot-mixed, machine laid, asphaltic concrete, and it shall conform to the appropriate Standards and Specifications. In addition, other material may be considered by the *City Engineer*.
- Gravel, surface-treated, or flush-coat treatments are not acceptable for new *Roadway* construction.

8.11.2 Paving Procedure

- Thickness shall be as designated by the accepted design.
- The pavement shall be laid on an approved base.
- The pavement shall be placed into two lifts as specified in the construction drawing.
- The final lift of pavement shall be placed at the end of the *Maintenance Period* or earlier at the discretion of the *City Engineer*.
  - As a guideline, the final paving shall be completed when 90% of the lots are built out.
- If the final paving is not done at the end of the *Maintenance Period*, the security shall be updated to current costs and held until the pavement is complete.
- In any case, the final paving shall be placed within three (3) years of *Substantial Completion* of the *Subdivision/Development*.
- When it is deemed physically or economically unfeasible to conform to new *Road* construction design criteria, the *City Engineer* may consider alternatives outside the limits noted in this Design Criteria Manual.

8.12 *Sidewalks*, Curbs, and Gutters

8.12.1 Curbs and Gutters

- Barrier curbs and gutters shall be used on both sides of all *Roadways* unless otherwise specified by the *City Engineer.*
  - The *City Engineer* may approve rollover curbs in *Local Roads* measuring 11 m or less in width except when next to schools, parks or multifamily *Developments*.
  - Where major flood path routing dictates, and on steep grades, the designer may propose barrier curbs on *Local Roads* 11 m or less in width, provided that predetermined driveway accesses are incorporated in the design.

- Transition between barrier curbs and rollover curbs shall take place over a minimum distance of 2 m; and
- *Road* support structure shall be constructed a minimum 300 mm beyond the edge of any surface design feature to provide support for the curb.

8.12.2 Curb/Wheelchair Ramps

- Curb ramps are required at all intersections.
- Where feasible, the *Consulting Engineer* shall provide double curb ramps, which provides a dedicated curb ramp for each individual crosswalk.
  - Where there is insufficient space for a double curb ramp due to larger corner radii, obstructions such as utility poles, and/or narrow pedestrian *Sidewalk*s, a combined curb ramp may be considered.
  - Combined and single curb ramps may be accepted if approved by the *City Engineer*.
- The desired curb ramp width (exclusive of flared sides) is 1.8 m, with a constrained limit width of 1.5 m.
- The curb ramps shall conform to the appropriate standard drawings (see Section C of the standard drawings in this Design Criteria Manual).
- A catch basin shall be located to intercept *Road* drainage at the upstream side of curb ramps.

8.12.3 Tactile Walking Surface Indicators (TWSIs)

- Cast-in-place TWSIs shall be installed at bus stops and both controlled and uncontrolled **marked** pedestrian crossings.
- TWSIs are **not** to be installed at **unmarked** pedestrian crossing locations.

8.12.4 *Sidewalks*

- Typical *Sidewalk* widths and standard cross-sections for different *Road* classifications (including tactile surface for the visually impaired) are outlined in Section 15.4 of this Design Criteria Manual. Depending on a project location or land use, the *City Engineer* may instead require wider *Sidewalks* that can be achieved through a combination of dedicated *City*-owned lands, lands acquired during *Development/Subdivision* applications, and/or easement agreements with adjacent property *Owners*.
- As per the *City*'s Downtown Langley Master Plan requirements, *Sidewalk*s shall be cast in place concrete walking surface, with sandblast finish, natural colour, saw cut joints in a rectangular pattern, and no tooled joints.
- One *Sidewalk* may be accepted on *Industrial Road*s where stipulated by the *City Engineer*.
- *Sidewalks* shall be continuous around curb returns and for a minimum of 3 m after the curb return into *Road*s not requiring *Sidewalks*.
- The grade of the *Sidewalk* adjacent to *Roadways* shall be consistent with the grade of the *Roadway*. *Sidewalk* crossfall grade shall be 2% sloped towards the curb.
- Base and sub-base preparation shall extend a minimum of 300 mm beyond the width of the *Sidewalk* or *Walkway*.

- For *Cul-de-sacs*, a *Sidewalk* will be required on one side of the access *Road* to the bulb portion. Where a *Walkway* is proposed off the bulb portion, the *Sidewalk* is to be extended around and connected to that facility.

Note: In all cases, *Consulting Engineers* shall confirm the required *Sidewalk* width with the *City Engineer* before submitting their design drawings.

8.13 Driveways

8.13.1 Driveways shall be located outside of any existing or planned turning lanes of signalized or unsignalized intersections.

- If there is not any other feasible access option available and upon the approval of the *City Engineer*, a driveway can be located as far away from the intersecting *Roads* as possible and are subject to median restriction right-in/right-out access only.

8.13.2 Residential driveway access to an *Arterial Road* is not permitted, unless in the opinion of the *City Engineer* an alternate access is not possible.

- Wherever physically possible, alternate *Local Road* access shall be dedicated to preclude residential driveways accessing directly onto *Arterial Roads*.
- When no alternative is available, residential driveways on *Arterial Roads* shall be subject to median restriction right-in/right-out turning movements only.

8.13.3 For improving cyclist and pedestrian safety on *Collector Roads* and when deemed feasible to the *City Engineer*, *Applicants* shall be required to upgrade an existing *Lane* or establish a new *Lane* to be used as their property driveway access.

8.13.4 For *Industrial*, *Commercial*, and Institutional (ICI) lands and upon approval of the *City Engineer*, limited direct access to *Arterial Roads may be permitted,* subject to median restriction right-in/right-out turning movements only.

8.13.5 The *City Engineer* may require deceleration and acceleration lanes for access off major *Roads* for safety reasons and to minimize disruption to traffic flows. Design of such access shall follow the recommendations in the British Columbia Supplement to TAC Geometric Design published by the Ministry of Transportation.

8.13.6 For the first 10 m from the property line on private property, the driveway shall not have a grade greater than 12% if accessing *Local Roads*. This maximum shall be limited to 10% if accessing *Collector* or *Arterial Roads*.

8.13.7 Where a corner *Parcel* adjoins *Roads* of different classifications, access is only permitted to the lower classification *Roadway*.

8.13.8 Only one driveway access is permitted to a single family lot.

- A separate parking pad for secondary suites independent of the primary driveway is not permitted.
- Upon *Owner*'s demonstrated <u>need,</u> to the *City Engineer's* satisfaction, a second driveway access may be granted.
- Unless otherwise approved by the *City Engineer*, a lot that can be accessed by a developed or developable *Lane* shall be the only vehicular access to parking.

8.13.9 Second Driveway Access:

The *City Engineer* may approve a second driveway access for multi-family residential, *Industrial*, *Commercial*, and Institutional lands only when:

- The first/primary driveway access of the subject property has a restricted right-in/right-out access to an *Arterial, Collector,* or *Local Road;*
- When the number of multi-family residential units is in excess of 100; or
- The *City Engineer* agrees that a second driveway may be required for on-site circulation of the design vehicle.

8.13.10 No driveway shall be constructed within 3.0 m of a streetlight or fire hydrant or street tree.

8.13.11 *Consulting Engineers* shall consider sight line constraints at horizontal and vertical curves when setting driveway locations. Driveways on the inside of horizontal curves and near the crest of vertical curves shall be avoided.

8.13.12 Driveway widths shall be:

Zone or Land Use	***Driveway Widths*** *(not including flares)*
Single Family Residential	Maximum 7 m, minimum 3.5 m
Multi-Family Residential	Maximum 9 m, minimum 4.5 m
Commercial, Institutional, and *Industrial*	Single D/W: Maximum 12 m unless otherwise approved by the *City Engineer*. More than one D/W: Maximum 9 m unless otherwise approved by the *City Engineer*.

8.13.13 All driveway access shall be by curb/*Sidewalk* letdown or rollover curb.

8.13.14 *Panhandle* driveways:

- Shall be constructed to the same *Road* base requirements as a *Local Road* standard.
- The *City Engineer* will consider exemptions to the above requirements upon receipt of a report from a Professional Geotechnical Engineer certifying that the native soil structure, drainage, and topography are such that a driveway which can adequately support emergency vehicles can be constructed with placement of 150 mm or less of base gravel.
- *Panhandle* driveways shall be subject to inspection and approval by the *City Engineer* for compliance to the required construction standard.

8.14 *Boulevards* and Planting Strips

8.14.1 All *Boulevards* and Planting Strips shall be finished with *Amended Soil* and sod, as per the requirements set in Section 11.0 of this Design Criteria Manual and the "Tree Planting and *Landscaping*" drawing approved by the *City Engineer*.

8.14.2 The *Applicant* shall be responsible for maintaining the *Boulevards* and planting strips, as per the latest edition of the Canadian Landscape & Nursery Association (CLNA) standards for *Boulevard* maintenance, until the end of the *Maintenance Period*, as set in Schedule B of the *City*'s Subdivision and Development Servicing Bylaw, as amended.

8.14.3 *Landscaping* may be required in certain areas and on certain classification of *Highway*s at the discretion of the *City Engineer*.

8.15 Medians

8.15.1 Medians are defined as the area between opposing lanes of traffic and can either be pavement markings only or with a physical barrier.

8.15.2 Unless otherwise approved by the *City Engineer*, raised medians shall be landscaped according to the requirements set in Section 11.0 of this Design Criteria Manual and an approved plan prepared by a Consulting *Landscape Architect*. Maintenance of the *Landscaping* shall be based on CLNA landscape standards until the end of the *Maintenance Period*, as set in Schedule B of the *City*'s Subdivision and Development Servicing Bylaw, as amended.

8.15.3 All raised medians shall be constructed with barrier curb and gutter.

8.15.4 All medians shall be constructed with signage.

8.16 Signage & Pavement Markings

8.16.1 Pavement markings, street and traffic advisory signs are required as part of the design submission by the *Consulting Engineer*.

8.16.2 Signage and pavement markings are to be designed in accordance with Manual of Uniform Traffic Control Devices for Canada.

8.16.3 Unless otherwise approved by the *City Engineer*, street signage shall be installed by the *City* at cost to the *Applicant* and Pavement markings shall be installed by the *Applicant*'s contractor.

8.17 *Walkways*, Ramps and Guards

8.17.1 Shall be designed to the BC *Building* Code and the *Building* Access Handbook.

8.17.2 *Walkway* pavement width shall be as per *MMCD*. requirements.

8.17.3 *Walkways* shall have ornamental streetlighting at:

- The entrance and exit;
- All changes in horizontal direction greater than 30° along its length; and
- Every 50 m.

8.17.4 *Walkway* grades shall not exceed 5%, unless steps, wheelchair ramps and hand rails independent of the chain link fencing are provided.

8.17.5 *Walkways* shall be adequately drained and shall be concrete or asphalt with chain link fencing on both sides and bicycle baffles at both ends per *MMCD* standards and Section 15.4 of this Design Criteria Manual.

8.17.6 Guards/Handrails

- Handrails shall be required:
  - Where drop off behind a *Sidewalk* exceeds 0.6 m.
  - Where steps are provided or where grade separation exceeds 0.6 m.
  - Along the top of major storm sewer outfalls.
  - Along *Walkway*s and *Sidewalk*s where steep or excessive side-slopes may be encountered, or

- In any location as deemed necessary by the *City Engineer* where, in their opinion, the safety of pedestrian traffic or the protection of the public so requires.

8.18 ***Trails***

8.18.1 *Trail* users are typically pedestrians (walkers, hikers, and joggers/runners), cyclists, in-line skaters, and skateboarders.

8.18.2 *Trail* Design Considerations:

- The following criteria are used to set *Trail* classifications:
  - i. Clear *Trail* Width: refers to the width of the traveled part of the *Trail* that is free of protruding objects and obstacles, such as trees and overgrown vegetation.
  - ii. Clear Zones: refer to the area on each side of the *Trail* between the traveled surface and any obstructions, such as trees, walls, or fences
  - iii. Vertical Clearance: refers to the height above the *Trail*, which is free from protruding objects and overhead obstructions, such as tree branches or bridges
  - iv. *Trail* Surface: refers to the type of surface on the traveled part of the *Trail*, such as asphalt, concrete, granular, or alternative. Surface quality is affected by tread obstacles, such as roots or rocks, and by any openings such as gaps and grates located within the *Trail* surface.

8.18.3 *Trail* Classifications: *Trails* classes reflect users' varieties, surfacing, amenities, and level of difficulties:

- **Multi-purpose *Trails***:

  A two-way *Trail* for smooth all-season use for cycling, strollers, roller blade, jogging, and walking. General passage by all ages, fully accessible for wheelchairs, and maintenance vehicles. The level of use is expected to be moderate to high.

  - Clear *Trail* Width: Typically, 2.5 - 4.5 m.
    - Design Grade: Shall be generally less than 5%, to provide for universal access. Grade preferably should not exceed 3%. If required to be greater than 5% for short runs, then consider switch backs or stairs. Provide for 2% cross slope and incorporate drainage *Swale*s.
    - Amenities: Benches, *Trail* kiosks, waste receptacles, bollards, lights as required and where do not disturb adjacent residential *Development*s, and interpretive signage.
  - Clear Zone: 1.0 – 2.0 m clearance on each side of the path.
  - Vertical Clearance: 3.0 m to accommodate cyclists and riders
  - *Trail* Surface Material: Asphalt.

- **Urban Nature *Trails***:

  A two-way path for walking, biking, hiking, jogging, and strollers. The level of use is expected to be moderate to high.

  - Clear *Trail* Width: Typically, 2.0 – 2.7 m.
  - Design Grade: Shall not exceed 3%. If required to be greater than 5% for longer runs, consider switch backs, if greater than 10% for short runs consider stairs. Provide for 2 -3 % cross slope.

- Amenities: Benches, *Trail* kiosks, waste receptacles, bollards, lights as required, and interpretive signage.
- Clear Zone: 1.0 m clearance on each side of the path.
- Vertical Clearance: 3.0 m
- *Trail* Surface Material: Gravel, hog fuel, crushed concrete/recycled asphalt, or crushed granite.

- **Nature or Hiking *Trails***:

  Plan as one or two way depending on sight conditions, intended use and sightlines. Typical users are Horses, hikers, and possibly mountain bikers. The level of use is expected to be low to moderate.

  - Clear *Trail* Width: Typically, 1.5 – 2.0 m.
    - Design Grade: Depends on the terrain, may include steps or stairs if grade exceeds 15%. Generally try and keep sustained grade between 5-10%. Provide for 2 -3 % cross slope and incorporate drainage *Swales*.
    - Install barriers in *Trail* and at *Trail* entrances to limit use of *Trail* to specific users (hikers /rider vs. Mountain bikes).
    - Amenities: Waste receptacles, and *Trail* identifier and distance marker.
  - Clear Zone: 0.5 – 1.0 m clearance on each side of the path.
  - Vertical Clearance: 2.5 m
  - *Trail* Surface Material: Gravel, or native soil.

~~8.18.4 When a recreational *Trail* is proposed on the subject property or the adjacent property, the *Applicant* shall confirm with the *City Engineer*, the actual location of the *Trail*, the appropriate *Trail* classification in order to determine the area to be dedicated and the design of the *Trail*, including whether there is a need for a trailhead facility.~~

~~8.18.5 In some cases, the land may be dedicated and fenced but the recreational *Trail* not constructed as determined by the *City Engineer* with *Cash in Lieu* contributions held in reserve for a time when more land for a continuous *Trail* is secured.~~

8.18.6 The design standard for the recreational *Trail* will be approved by the *City Engineer* (see typical cross section drawing and specifications in Section 15.4 of the standard drawings in this Design Criteria Manual).

8.18.7 *Trail* signage for way finding and linkages to the recreational *Trail* network, use and behavior of the *Trail* facility, and safety at conflict points such as *Roads* shall be required.

8.18.8 *Trail* lighting where a recreational *Trail* meets a *Road* shall be accomplished by locating the light on the *Road* in a way that benefits the entrance for the *Trail*, similar to lighting requirement for *Walkways*.

8.18.9 When a *Trail* is proposed on the subject property or the adjacent property, the *Applicant* shall confirm with the *City*, the actual location of the *Trail* as well as the appropriate *Trail* classification as set out by the *City Engineer*. The classification shall determine how the *Trail* is to be constructed, what amenities are required as well as the overall width of the *SRW* required.

8.18.10 The *Trail* must be constructed in accordance with the specifications noted on the applicable Drawings (see Section 15.4 of the standard drawings in this Design Criteria Manual). The *SRW* must be dedicated to the *City* as part of the final *Subdivision/Development* agreement.

8.18.11 ~~In some cases, the *City* may choose to take a cash pre-payment for the development of the *Trail*. A cash payment will be taken in the event that the *Trail* section has no logical continuation beyond the area being developed. The *City* shall request a cash pre-payment at its sole discretion~~.

8.18.12 *Trail* signage including way finding signs, entry control bollards, line markings, etc. are considered integral to the *Trail* system and their costs shall be covered by the *Applicant*.

8.18.13 *Trail* lighting where *Trails* meet a municipal *Road* shall be accomplished by the locating the pole and light fixture on the *Road* allowance in a location that illuminates both the *Road* and the *Trail* intersection.

8.19 Bus Stops

8.19.1 Where *Subdivision/Development* occurs adjacent to a bus route, provisions shall be made for bus stops, as either extra *Road* allowance or registered statutory *SRW*;

8.19.2 The required infrastructures at the designated bus stop shall be based on TransLink's "Bus Infrastructure Design Guidelines", as amended from time to time;

8.19.3 Bus stop infrastructures shall be clear of:

- The designated *Sidewalk* to provide handicapped access along any *Sidewalk* or *Walkway; and*
- The bicycle lane, where applicable.

8.19.4 Bus stops shall be designed to the satisfaction of TransLink and the *City Engineer*;

8.20 Traffic Impact Assessment (TIA)

8.20.1 The purpose of a TIA is to assess the impact of a proposed land construction, including *Subdivision/Development*, project on pedestrian, cyclist, transit, and automotive infrastructure. If adverse impacts are expected, a TIA shall also recommend strategies and improvement measures, acceptable to the *City Engineer*, to mitigate these impacts on existing and planned *City* infrastructure.

~~8.20.2 A TIA is not required for a single family, duplex, triplex, and fourplex *Subdivision/Development* application.~~

8.20.3 Where a TIA is required by the *City Engineer*, it will be the responsibility of the *Applicant* to retain a Professional Engineer with expertise and experience in transportation planning and traffic engineering. The TIA study must be signed, dated and stamped accordingly. The signing Professional Engineer is verifying that appropriate assumptions and methodologies have been utilized in the completion of the TIA and that they shall take corporate and professional responsibility for the study.

8.20.4 The required TIA scope of work shall depend on the number of two-way vehicle trips a *Development* is expected to add during its busiest one-hour period (typically a weekday afternoon).

- TIA scope of work breakdown is shown below:

Number of Added Two-Way* Vehicle Trips (During PM Peak hour)	Type of TIA
Fewer than 30	Basic TIA Required
Between 30 and 49	Reduced Scope TIA
50 and greater	TIA

*- i.e., to and from the site

8.20.5 The typical scope of work required for each level of TIA is shown in the table below. Further detail on each of these scope of work items is provided in the following sections. Before the TIA begins, the TIA's scope of the work shall be approved by the *City Engineer*.

Section	Scope Item	Basic TIA	Reduced Scope TIA	TIA
Existing Conditions	Description of Existing Transportation Network		✓	✓
	Traffic Data Collection			✓
	Operational Analysis of Existing Conditions			✓
Future Background Conditions	Background Traffic Projection			✓
	Operation Analysis			✓
Future *Development* Conditions	Description of the *Development*	✓	✓	✓
	Trip Generation	✓	✓	✓
	Trip Reductions			✓
	Trip Distribution and Assignment			✓
	Operational Analysis			✓
Site Access and On-Site Circulation Review			✓	✓
Parking Review			✓	✓
Transportation Demand Management (TDM) Measures Review (if applicable)			✓	✓
Conclusions and Recommendations		✓	✓	✓

8.20.6 Additional TIA scope of work may be required, if in the *City Engineer's* view, a proposed land construction, including *Development,* project has the potential to cause adverse operational or safety impacts on the *Road* network due to any of the following:

- The proposed project is adjacent to a *Roadway* or intersection with localized safety or capacity deficiencies as identified by the *City Engineer*;

- Any other local traffic problems exist which may affect the ability of the existing or proposed *Highway* to accommodate the proposed project;
- The proposed project is located in an area exhibiting high *Roadway* congestion and/or a high rate of anticipated growth;
- The project's proposed access driveway is within 150 m of a signalized intersection or within auxiliary lanes of an intersection;
- The proposed project includes a drive-thru facility;
- As part of the project, a new traffic control signal or a roundabout is proposed;
- Presence of substandard horizontal or vertical sight distance at access or proposed municipal *Road*; and
- Absence of a left or right turn lane(s) on a municipal *Road* affected by the proposed project.

8.20.7 Additional scope can include items such as signal warrant calculations, collision analysis, speed surveys, sight visibility surveys, etc. The *Consulting Engineer* is required to confirm their TIA scope of work with the *City Engineer* prior to starting their work.

8.20.8 Existing Conditions:

This section of a TIA report, at the minimum, shall include the following:

- A description of the existing transportation network within 400 meters of the site's outer perimeter. This description shall include a description of *Roads*, intersections and accesses, pedestrian and bicycle facilities, transit facilities and operations, connectivity to other destinations, and a general review of the *City*'s relevant planning documents.
- Traffic data collection for all study intersections and access points. Traffic counts shall be undertaken in 15-minute intervals and shall include peak periods. Typical periods may include the weekday (AM, midday, and PM) and the Saturday peak period. All traffic data should not be more than 2 years old. All modes of transportation (vehicles, trucks, buses, cyclists, and pedestrians) shall be accounted for when turning movement counts are being completed.
- Operational analysis of the existing *Road* network from a vehicular perspective shall follow Highway Capacity Manual (HCM) guidelines, as amended from time to time.
- Unless required otherwise by the *City Engineer*, operational analysis from a transit and/or active mode perspective are not required.

8.20.9 Future Background Conditions (without the proposed *Development*):

- Unless otherwise directed by the *City Engineer*, future background traffic analyses shall include the *Development*'s opening day, and the opening day plus ten years (also called the horizon year).
- If the *Development* will be completed in phases, multiple horizon year analyses shall be required.
- This section of a TIA report, at the minimum, shall include the following. The *City Engineer* shall be consulted on all the related assumptions prior to proceeding with the analyses.
    - The development of a set of future background traffic volumes. The purpose of defining background traffic is to establish future conditions in the study area without the proposed *Development*.

- The growth rate method shall be used to project non site-specific traffic. In the absence of official growth rate forecast acceptable to the *City Engineer*, a 2% per year traffic volume growth rate shall be used.
- Operational analysis of the *Road* network from a vehicular perspective shall follow HCM guidelines, as amended from time to time.
- Unless required otherwise by the *City Engineer*, operational analysis from a transit and/or active mode perspective are not required.

8.20.10 Future *Development* Conditions:

This section of a TIA report, at the minimum, shall include the following. The *City Engineer* shall be consulted on all the related assumptions prior to proceeding with the analyses.

- A description of the *Development*. This shall include the title and address of the project, the location and purpose of the *Development*, a description of the neighbourhood, a site plan with accesses and parking areas, *Development* phases (if applicable), and the land use type and density.
- Trip generation estimates of the *Development* in the horizon year. These estimates shall be based on information from the *Trip Generation Manual*, as amended from time to time, published by ITE or locally developed rates.
- Transportation Demand Management (TDM) measures may be considered by the *Consulting Engineer* to reduce vehicle trips to/from the site to reduce the impact on the transportation network. The *City Engineer* may approve a reduction to the vehicle trip estimate only when:
  - The *Consulting Engineer* demonstrates, to the satisfaction of the *City Engineer*, that long-term TDM measures are practical and sustainable; or
  - The *Development* is within a 5-minute walk (approximately 400 meters) from *Commercial* or rapid transit services.
- Trips generated by *Development* must be applied to the transportation network. This assignment shall be based on information developed by travel demand models, existing traffic data, or the site's proximity to *Arterial Roads* and other *Developments*.
- Operational analysis of the *Road* network from a vehicular perspective shall follow HCM guidelines, as amended from time to time.
- Unless required otherwise by the *City Engineer*, operational analysis from a transit and/or active mode perspective are not required.

8.20.11 Site Access and On-Site Circulation Review

This section of a TIA report, at the minimum, shall include the following:

- A discussion of vehicular capacity and performance indications at the property access point for all movements. Please note this item is not required if the size of the *Development* does not warrant operational analysis.
- The *City Engineer* may require on-site circulation routes be reviewed from the perspective of efficiency and safety. This shall include any activities involving commercial vehicles and loading/unloading activities. This discussion must identify unusual elements and comment on any potential issues.
- The study shall also demonstrate that the largest vehicles accessing/exiting the site can be accommodated through the use of swept path analysis ~~turning templates~~.

- Unless otherwise approved by the *City Engineer*, the commercial vehicle access route, for onsite loading/unloading goods or collecting waste/compost/recyclables, shall be designed in such a way to allow the vehicle to enter, load/unload/collect, and exit the site in a forward motion. Vehicle backing up onto a City road is not permitted.

- An assessment of the location of proposed accesses in relation to nearby intersections.
- A discussion on geometric aspects of accesses relate to each type of user. Emphasis shall be placed on ensuring the needs and safety of active mode users are not compromised by efforts to facilitate vehicular traffic.
- An assessment of sight line visibility at accesses.

8.20.12 Parking Review

This section of a TIA report, at the minimum, shall include the following:

- A review which addresses the issue of proposed onsite parking versus how much parking is required per the *City*'s *Zoning Bylaw*.
- Parking analyses under any circumstances shall not rely on on-street parking to meet the required number of parking stalls specified in the *City*'s *Zoning Bylaw*.

8.20.13 Conclusions and Recommendations

- The TIA shall highlight how the proposed *Development* will impact the transportation system. The discussion shall include both operational issues as well as other multi-modal issues related to the site interface with the surrounding network.
- Where required, the TIA shall recommend engineering measures to mitigate any adverse impacts on the transportation system. Recommended mitigating measures shall be investigated from a multimodal perspective, to ensure that the needs of active modes users are not compromised by efforts to improve vehicular operations and safety. The recommendations shall take into consideration any future planned improvements in and around the study area.

8.20.14 TIA Report Submittal

- An unlocked PDF format of the report, plus unlocked electronic copies of all the working files used in the TIA analyses (e.g., modeling files and their input data, traffic counts, etc.) shall be submitted to the *City Engineer* for review and approval.

~~8.20.15 The *Developer* shall implement TIA recommended improvements at their cost.~~

8.21 Transit Routes

8.21.1 Any *Development* that fronts a transit route shall consult with TransLink and address any concerns, such as traffic calming, bicycle and pedestrian access, bus stops, etc.

8.22 Bicycle Routes

8.22.1 The *City* promotes a multimodal transportation system to support all modes of travel, which includes creating a safe and cohesive bicycle network.

8.22.2 Bicycle routes shall form part of the design for the *Roadway* fronting the *Development* if that *Road* is designated as a "Bicycle Route" in the *City*'s Transportation Master Plan, as amended from time to time, or any other related studies. The *City Engineer* at their discretion may require additional

design requirements to address traffic and safety issues.

8.22.3 Unless approved by the *City Engineer*, bicycle routes shall be designed as Separated, Buffered/Protected, or *MUP*.

8.22.4 *MUP* width shall be approved by the *City Engineer* prior to design.

- *MUP*s shall be at least 3.5 m wide. Under no circumstances, *MUP*s width shall be less than 2.5 m.
- *MUP* surface treatment shall provide smooth surface treatment and typically be asphalt.
- *MUP*s shall use locking post bollards to restrict unauthorized vehicular access at all major *Road* crossings, multi-family residential, *Industrial*, institutional and *Commercial* driveway crossings. Bollards shall be placed typically at the center of the *MUP* travelled surface.

8.22.5 Bicycle lanes shall not be extended into roundabout's circulatory *Roadway*. This can be accommodated by:

- Diverting cyclists to a buffered route or a "shared-used *Sidewalk*" before and after the roundabout; and
- Using a "bicycle crossing path" parallel to the crosswalk to cross the intersection.

8.22.6 The *Consulting Engineer* shall use the following guidelines to design bicycle lanes:

- Geometric Design Guide for Canadian Roads, Chapter 5 - Bicycle Integrated Design (*TAC*), latest edition; and
- British Columbia Active Transportation Design Guide, Ministry of Transportation and Infrastructure (MOTI), latest edition.
- The *Consulting Engineer* shall obtain *City Engineer's* approval before proceeding with the final design method.

8.23 Traffic Calming

8.23.1 The *Consulting Engineer* shall follow the *City*'s Traffic Calming Policy, as amended.

8.23.2 Unless approved otherwise by the *City Engineer*, traffic calming initiatives shall be incorporated in the *Road* design.

8.23.3 The *Consulting Engineer* shall obtain the *City Engineer*'s approval before proceeding with one of the following traffic calming measure in the final *Road* design (see the next page):

Traffic Calming Measure	Location Applicability			
VERTICAL DEFLECTION	***Local***	***Collector*** **(only when fronting elementary schools or parks)**	***Arterial***	**Emergency and/or Snow Route**
Raised Crosswalk (only considered where there is an existing marked crosswalk, or a crosswalk is warranted)	✓	✓	×	×
Raised Intersection	✓	▪	×	▪
Speed Cushion	✓	✓	×	×
Speed Hump	✓	✓	×	×
HORIZONTAL DEFLECTION	***Local***	***Collector***	***Arterial***	**Emergency and/or Snow Route**
Chicane (one lane)	✓	×	×	×
Curb Radius Reduction	✓	✓	▪	▪
Traffic Circle (with a small raised island to allow for truck to use/climb)	✓	×	×	×
Roundabout	×	✓	✓	▪
***ROADWAY* NARROWING**	***Local***	***Collector***	***Arterial***	**Emergency and/or Snow Route**
Curb Extension	✓	✓	×	▪
On-Street Parking (as appropriate by *Road* cross-section)	✓	✓	×	▪
Road Diet (adding bike lanes/wider *Sidewalks*)	✓	✓	✓	✓
Centre Median	✓	✓	×	▪
NON-PHYSICAL MEASURES (includes surface treatments and education)	***Local***	***Collector***	***Arterial***	**Emergency and/or Snow Route**
Thermoplastic/Transverse Rumble Strips	▪	▪	▪	▪
On-*Road* Pavement Markings (“Sign”, converging chevrons)	✓	✓	▪	▪
Speed Display Devices	×	✓	✓	✓
Speed Watch	✓	✓	▪	▪
✓ **Suitable**	▪ **Use with Caution**		× **Not Suitable**	

8.24 Pavement Cut/Restoration

Pavement cuts reduce the serviceable life of *Roads*, as well as safety, ride quality, aesthetics, and performance. Pavement restoration requirements outlined this section of the Design Criteria Manual apply to all *Roads* in the *City* and intend to preserve the service life of *Roads* while keeping ride quality to a high standard.

8.24.1 Definitions used in this section of the Design Criteria Manual:

HUP

means a *Highway Use Permit*

Permittee

means person or corporation applying for or holding an approved pavement cut permit.

Temporary Pavement Restoration

means the work completed by the Permittee which will be in place for a maximum duration of 12 months. Full depth asphalt milling and filling shall be minimum 200 mm beyond the outer most edge of trench or asphalt cracking.

Permanent Pavement Restoration

means the work completed by the *City* within 12 months after all Temporary Pavement Restorations are completed. It involves a 40 to 50 mm minimum mill and fill (depending on *Road* classifications), minimum 200 mm beyond extent of temporary pavement restorations or asphalt cracking.

Pavement Reinstatement Fee

means the fee collected by the *City,* as per the Fees and Charges Bylaw, as amended, to fund the Permanent Pavement Restoration of the pavements cuts about 12 months after the temporary restoration is completed.

Pavement Degradation Fee

means the fee charged for the shortened life cycle of the asphalt *Road* being cut, as per the Fees and Charges Bylaw, as amended.

Pavement Cut Form

means the form used to calculate the required Pavement Reinstatement Fee and Pavement Degradation Fee. Also used to track pavement cuts for Permanent Pavement Restoration.

8.24.2 All pavement cuts must be authorized through the *City* HUP, complete with a Pavement Cut Form.

8.24.3 The Permittee will be responsible to provide Temporary Pavement Restoration for all HUP's requiring pavement cuts. Repairs on *Arterial* and *Collector Roads* must be completed by the end of each working day, if the *Road* is open to traffic, and as per the *City*'s specifications in Section 15.4. *Local Roads* and roads temporarily closed may be restored at a later date; approval from the *City Engineer* is required.

8.24.4 The *City* shall coordinate and monitor as necessary the works of B.C. Hydro, Telephone, Gas and Cable.

8.24.5 Planned work performed by the *City* shall comply with the restoration requirements of this Design Criteria Manual, however, deposits and fees will not be charged. Emergency works will be given special consideration depending on the scope of the work, schedule and weather.

8.24.6 All costs associated with the pavement cut/restoration requirements in this section including administration, inspection and reinstatement will be offset through fees and charges established in the City's Fess and Charges Bylaw, as amended from time to time.

8.24.7 The extent of pavement restoration required will depend on the impact of the proposed cuts/works on the adjacent *Road*s.

- At the *City Engineer*'s discretion, the *Applicant* may be required to modify the scope of proposed off-site works to include pavement restoration works on *Road*s adjacent to the Developing *Parcel* of land.

8.24.8 A pavement cut shall be prohibited at *Highway*s or *Roadway*s that have been constructed or rehabilitated within the last five years. However, consideration for exceptions may be given by the *City Engineer* if the Permittee proves the following:

- The cut could not have been foreseen;
- The work could not have been completed prior to the rehabilitation work;
- There is no practical alternative, i.e., pushing or drilling the utility, that is cost affective (within 1.5 times the cost of the open cut option). Cost estimates must be provided by the *Consulting Engineer*.

If the *City Engineer* authorizes the cut, the Permittee may be required to:

- Increase paving extent, over and above the typical 0.4 m beyond trench cut and/or to the nearest lane line or lane centerline, i.e., for the full frontage of the property, half *Road*, full *Road*, or travelled lane; and/or
- Perform full depth pavement milling and filling in two lifts.

8.24.9 Pavement cuts where permitted shall be reinstated to the standards prescribed in Section 15.4 of this Design Criteria Manual.

8.24.10 Pavement Cut Procedure:

- Applications for a Pavement Cut Permit shall be made to the Engineering, Parks and Environment Department along with application and payment for a HUP and Pavement Reinstatement Fee. Associated fees are contained in the *City*'s Fees and Charges bylaw.
- Pavement Cuts shall consist of a 2-stage process:
  - Initial cut and Temporary Pavement Restoration by the Permittee, as shown in the Section 15.4 - Supplementary Specifications Standards and Drawings; and
  - Permanent Pavement Restoration that will be completed by the *City*.
- All concrete work shall be to the latest *MMCD* Standards.
- All works shall comply with the HUP. Failure to do so will result in rejecting the HUP and the *City* completing the pavement repair works at the Permittee's expense.
- Land *Development* Projects: Pavement Reinstatement Fee shall be paid by the *Applicant* prior to starting the work.

- *City* Capital Programs: For *Contractor*s, the *City Engineer* shall establish the cut reinstatement requirements and include in the tender documents prior to tendering.
- Utility Companies: The location of the proposed road cut will be inspected by the *City Engineer* who will assess the condition of the existing pavement and determine the extent of reinstatement and the charge to cover reinstatement.
- Longitudinal Cuts: Shall comply with Standard Drawing (Section 15.4 - Supplementary Specifications Standards and Drawings), and adhere to the criteria below;
  - The existing *Road* surface will be milled and filed with 40 mm minimum depth of asphalt;
  - At a minimum to 0.2 m beyond the outermost edge of the Temporary Pavement Restoration extents and/or cracking; and
  - To the next middle of a travelled lane and/or lane line, for full length of trench cut.
- Cross Cuts: Shall comply with Standard Drawings (Section 15.4 - Supplementary Specifications Standards and Drawings), and adhere to the criteria below;
  - For individual trench cuts mill and fill 40 mm minimum asphalt depth;
  - At a minimum, to 0.2 m beyond the outermost edge of the Temporary Pavement Restoration extents and/or cracking, and to the next middle of a travelled lane and/or lane line, for full length of trench cut;
  - For multiple trench cuts with gap between cuts less than or equal to 10 m, the Permittee shall be required to mill and fill the entire area between cuts to 0.2 m beyond the outermost edge and the entire area between the cuts, the gap. Furthest crosscut from curb determines the restoration width for all; and
  - When five or more trench cuts occur within a 100 m section of *Road*, the Permittee will be required to pay the pavement degradation free based on the 100 m section of *Road*.

SECTION 9.0 – Streetlighting

9.1 General

Lighting of streets and *Roadways*, including *Sidewalk*s, crosswalks, intersections, roundabouts and *MUP*s, is to enhance visibility at night. Proper lighting would result in better visibility of the surrounds for pedestrians and increased time to stop or maneuver around an obstacle for drivers.

The purpose of the design criteria outlined in this section is to establish *Roadway* and *Walkway* lighting standards used for all projects within the *City*.

Streetlighting design shall comply with the latest edition of the ANSI/IES RP-8 National Standard Practice for *Roadway* Lighting standards. In consultation with the *City,* the *Consulting Engineer* may consider alternative design standards for demonstration purposes.

Detailed drawings and specifications for streetlighting systems shall be designed and sealed by a *Consulting Engineer* with expertise in Electrical Engineering.

9.2 Streetlighting Levels

The *City* has standardized minimum average maintained horizontal luminance levels, uniformity ratios, and veiling luminance ratios (see Table 9.1). This information shall be displayed on design drawings in tabulated form as shown in Table 9.2. For additional information refer to the latest edition of the ANSI/IES RP-8 National Standard Practice for *Roadway* Lighting standards. Use of the illuminance method under specific circumstances must be accepted by the *City* prior to submission.

The *Roadway* classifications, luminance and illuminance levels, uniformity ratios, and pedestrian conflict areas for intersections, isolated intersections, and *Walkways*, shall be listed in tabulated form on design drawings; refer to ANSI/IES RP-8 National Standard Practice for *Roadway* Lighting standards.

Note: Other design methods (e.g., Luminance & Small Target Visibility (STV) method) may be considered by the *Consulting Engineer*. The *Consulting Engineer* shall obtain approval before proceeding with alternate design methods.

9.2.1 The illumination levels at all intersections (intersections shall include *Lanes*, *Trail*s & crosswalks) shall be determined by the higher *Highway* classification and application; refer to ANSI/IES RP-8

9.2.2 Illumination shall be provided at all locations where *Trails* and *Walkways* intersect with streets.

9.2.3 LED colour temperature (CCT) in Residential, Institutional, *Commercial*, and *Industrial* areas shall have a colour temperature of 4000º Kelvin.

9.2.4 Luminaire descriptions shall contain the following information:

- Manufacturers make and model
- Luminaire distribution pattern
- BUG Rating
- Driver current (mA)
- Driver Option
- Initial lumen output (lm)
- Voltage
- Finish (RAL#)
- Certification
- Mounting method
- Receptacle Option

9.2.5 Design drawings at the minimum shall show the following information:

- Distribution type;
- Maximum spacing of luminaires;

- Average Luminance achieved for the luminaire selected, i.e., design requirement and level achieved by design;
- Luminaire manufacturer, type and model number;
- The uniformity ratio, i.e., design requirement and uniformity achieved by design; and
- The Veiling Luminance.

9.2.6 Pedestrian Conflict Area Light Levels

- Pedestrian Conflict light levels in the *City* shall be designed at the Medium level (or higher).

9.2.7 Luminaire Replacement

- Luminaires shall be replaced with LED fixtures only. *Roadway* classification shall be used to determine specification.

Table 9.1 *Roadway* Streetlighting Design Standards

***Highway* Classification**	**Pedestrian Area Classification**	**Average Luminance** L_{avg} **(Cd/*m²*)**	**Avg. Uniform Ratio** (L_{avg}/L_{min})	**Max. Uniformity Ratio** (L_{max}/L_{min})	**Maximum Veiling Luminance Ratio** (LV_{max}/L_{avg})
ARTERIAL	High	1.2	3.0	5.0	0.3
	Medium	0.9	3.0	5.0	0.3
	Low	0.6	3.5	6.0	0.3
COLLECTOR	High	0.8	3.0	5.0	0.4
	Medium	0.6	3.5	6.0	0.4
	Low	0.4	4.0	8.0	0.4
LOCAL	High	0.6	6.0	10.0	0.4
	Medium	0.5	6.0	10.0	0.4
	Low	0.3	6.0	10.0	0.4
LANE	As Required by the *City Engineer*				

L_{avg}: Minimum maintained average pavement luminance

L_{min}: Minimum pavement luminance

LV_{max}: Maximum veiling luminance

Table 9.2: Lighting Design Criteria Table Example

Street Name	53 Avenue	
Lighting Software	AGi32	
Roadway Classification	*Local*	
Pedestrian Conflict Classification	Medium	
Pavement Classification	R3	
Roadway Width	8.6 m	
Luminaire Description	LED *Roadway* lighting Ltd, NXT 36S 2HB 525 Type 2HB B2-U0-G2 525Ma Dimming (0-10v) 6883 Lumens 120-277V GY RAL 7035 cULus 2H S	
Photometric File No.	NXT-36S-525mA-2HB-3000K	
Light Source and Wattage	36W LED	
Lamp Color Temperature (K)	4000 Kelvin	
Light Loss Factor	0.75	
Initial Lamp Lumens	2300 Lm	
Luminaire Mounting Height	7.62 m	
Luminaire Setback from Face of Curb	0.5 m	
Pole Arm Length	1.8 m	
Pole Arrangement / Spacing	One Sided / 40m	
LUMINANCE DESIGN CRITEREA	Required	Achieved
Average Luminance (Cd/m^2)	0.5	0.73
Uniformity Ratio (L_{avg}/L_{min})	6.0:1	2.7:1
Uniformity Ratio (L_{max}/L_{min})	10.0:1	6.7:1
Veiling Luminance (L_{vmax}/L_{avg})	0.4	0.32

9.3 Streetlight Luminaires

9.3.1 Unless otherwise required by the *City Engineer*, the mounting height shall match those of existing lights being retained in the same block if the *Road* classification and pedestrian conflict level is the same.

9.3.2 The designer shall use the latest edition of the "Illuminating Engineering Society of North America (IESNA), ANSI/IES RP-8" standards to select the most effective luminaire distribution type to suit the *Roadway* geometrics.

9.3.3 Cobra head LED luminaires shall be used for all *Roadway* lighting applications outside the downtown area except as instructed by the *City Engineer*. See Section 15.4 - Electrical Supplemental Specification Drawings for the downtown area map.

9.3.4 Unless otherwise approved by the *City Engineer*, the operating voltage for the streetlighting system shall be120V.

9.3.5 Cobra Head Fixtures:

- Shall be LED *Roadway* Lighting model: GE Evolve ERLx xx xx 40.
- Shorting caps or PEC as required.
- Type 2 or 3 distribution or *City* approved equal.
- Luminaire wattage and distribution shall be determined by the streetlight design.
- All Cobra head luminaires shall be provided with lamp wattage labels - black text on a yellow background denoting number of watts and LED.
- Hand hole covers shall have theft deterrent mechanisms to be determined by *City* staff.

9.3.6 Post Top fixtures:

- In downtown area:
  - Post top fixtures shall be Lumca CP6139 series LED light source.
  - LED wattage shall be determined by the streetlight design.
  - Luminaires shall be powder coated and textured semi-gloss, black in colour. Lumca catalog no.: CP6139 LED 1xx RC3 AC 120 BK.
  - House side shields may be required.
  - Local Mfr. Representative is Meta West Sales.

9.4 Voltage Drop

9.4.1 At the *City Engineer's* request, the designer shall produce voltage drop and load calculations for the streetlighting system.

9.5 Lighting Calculations

9.5.1 Lighting calculations shall be completed using suitable computer lighting design software designed to carry out the required calculations by inputting the luminaire manufacturers IESNA formatted photometric files. *Roadway* pavements will be design under the following classification; where the surface is concrete use R1 and asphalt use R3.

9.5.2 A maximum of 1.0 m Grid spacing for pedestrian *Walkway*/bikeway calculation shall be used. Lighting calculations shall be based on maintained levels using initial rated lamp lumens and the total light loss factor (TLLF) of 0.78 for LEDs. The TLLF shall be considered as the total maintenance factor.

9.6 Streetlight Pole Locations

9.6.1 Poles shall be located opposite property corners, and shall not conflict with proposed driveway and/or underground services. The exact offset of the pole locations from property lines is to be shown on design drawings. Minimum clearances to overhead and underground utilities required by relevant legislation, codes, Worksafe BC and utilities companies. Refer to Section 15.4 of the standard drawings in this Design Criteria Manual for the typical locations.

9.7 Streetlight Pole Specifications

9.7.1 Cobra Head Streetlight Poles

- Standard one-piece tapered octagonal cobra head davit pole complete with security hand hole cover.
  - Pole shall be galvanized and powder coated.
  - Arm Length: 2.44 m (8 ft.).
  - Typical pole height:
    - *Arterial Roads*: 9.1 m (30 ft.)
    - *Collector* and *Local Roads:* 7.2 m (25 ft.)
- Pole colour shall be Tiger Drylac gray outside of the downtown core.
- Poles shall be powder coated black in the downtown core.

9.7.2 Downtown Area Post Top Light Poles

- The *City* uses decorative streetlighting in the Downtown Area to enhance its streetscape. A drawing which indicates where decorative streetlighting must be installed can be found in Section 15 – Supplementary Specifications Standard and Detail Drawings.
- The Downtown area post top lit poles shall have the following specifications:
  - Nova Pole - 4.9 m STEP POLE comes with 102 mm o.d. tenon & type 6 base cover, cascade Style type 3, or *City* approved equivalent complete with security hand hole cover with theft deterrent mechanism to be determined by *City Engineer*
  - 127 mm (5”) diameter Straight shaft round pole complete with 102 mm (4”) o.d. tenon and provision for a duplex receptacle on the same side of the pole as the hand hole.
  - Round base diameter 168.1 +/- mm, and matching 2-piece aluminum pole base skirt. Transition cover not required.
  - Pole base: Slotted holes to fit 171.5 mm to 203 mm (i.e., 6.75” to 8”) bolt square and 25.4 mm (1”) diameter bolts. If installing a new pole onto an existing base, ensure the new pole will fit the existing base bolt square / BCD.
  - Colour for downtown area poles and bases shall be Spectrum XP Black Texture Product Code: BK70-XTP385 (Tiger Drylac RAL 9005 or equal).
  - Poles and bases shall be galvanized, powder coated and textured semi-gloss.
- Contact *City* to confirm pole location area and whether banner arms or flower basket arms etc. are to be installed.

9.8 Streetlight Underground Conduit

9.8.1 Streetlight conduits shall be min. 32 mm (1 ¼”) diameter.

9.8.2 Underground wiring for streetlighting shall be designed in accordance with *MMCD* Standard Details, B.C. Hydro Specifications and shall conform to the rules and regulations of the *Canadian Electrical Code (Part 1)*, the Provincial Electrical Inspection amendments and any *City* codes or bylaws and other authorities having jurisdiction;

9.8.3 The standard offset for the location of the underground streetlighting ducts within *Highway* rights-of-

way shall conform to the typical cross-sections;

9.8.4 The minimum depth for the underground ducts shall be 0.60 m in *Roads* and 0.45 m in *Boulevards*.

9.8.5 It is the Consulting Electrical Engineer's responsibility to ensure that the service entrance for streetlighting systems is approved by B.C. Hydro prior to construction.

9.9 Clearances to Hydro Lines

9.9.1 The requirements of B.C. Hydro, *Canadian Electrical Code*, B.C. Electrical Inspectors Branch, and the Workers' Compensation Board shall be followed with respect to clearances between streetlight poles, luminaries, high voltage and other conductors.

9.10 Number of Luminaires per Service

9.10.1 The Consulting Electrical Engineer shall set the number of luminaires on any hydro service. Where a new system can be extended in the future, the design shall account for this in sizing wire and circuits accordingly.

9.10.2 Where an existing system is to be extended, the Consulting Electrical Engineer shall ensure that existing service entrance, circuits and power draw on the existing service meets minimum standards and regulations of the *Canadian Electrical Code.*

9.11 Transition Lighting

9.11.1 On *Roadways* connecting residential areas to *Commercial* areas, the spacing of luminaires shall change gradually to suit the change in levels of illumination. In the case where luminaire output or type changes, the spacing in the transition zone may not have to change significantly. In any case, the spacing changes in the transition area shall not be abrupt or irregular.

9.12 Streetlight Service Bases

9.12.1 Any services bases installed for a project shall have neoprene (or equal) gaskets between the concrete base and service base.

9.12.2 Where a streetlight pole is located on top of a service base, a neoprene (or equal) gasket shall be installed between the service base and bottom of pole and silicone sealed to prevent water from entering the service base/panel.

9.13 Streetlight Service Panels

9.13.1 Streetlight Service Panels shall be:

Valid BSD1A24CQ-6-190383" 40 amp 120 volt panel complete with a 15a breaker for photocell, 30a breaker for streetlight, and "surgebreaker" protective device.

9.14 Streetlight Junction Boxes

9.14.1 Shall be Oldcastle Duralite Model 1324-18";

9.14.2 Shall be stamped/labeled "C.O.L" on the lid;

9.14.3 Shall be bolted down with "Pent" securing bolt; and

9.14.4 Shall have drain rock at bottom and surrounding area.

9.15 Aluminum Wire

9.15.1 When aluminum wire is to be used, it shall have “Property of City of Langley” stamped on the wire jacket

9.15.2 All connections of aluminum wiring shall be done according to latest version of the Canadian Electrical code.

9.16 Other Design Features

9.16.1 All luminaires to be flat glass reflectors, full cut off optics. Cobra head luminaries shall have flat glass lenses with detachable power supplies.

9.16.2 All posts shall have minimum 1.0 m radius clear working area

9.16.3 In In consultation and coordination with the *City Engineer*, all “Hand Hole Covers” on streetlight poles shall be equipped with “reverse thread security #2 bolt, backing bar, and recessed hole for bolt on cover”.

SECTION 10.0 – Traffic Signals

10.1 General

10.1.1 Traffic signals may be required to increase intersection capacity or enhance the safety of vehicular traffic or pedestrians. The need for a traffic signal will be determined by the *City Engineer* or based on warrants in accordance with the Manual of Uniform Traffic Control Devices for Canada (MUTCD).

10.1.2 Traffic signal details are to be standardized in Langley to be consistent with traffic signal details used throughout British Columbia, including:

- Vertical mounted signal heads
- Left side secondary heads
- Order of signal indication

10.1.3 The most current edition of the following documents provide background and direction for traffic signal design in the *City*:

- The City of Langley Design Criteria Manual, as amended
- BC Ministry of Transportation and Infrastructure Electrical and Traffic Engineering Manual
- Institute of Transportation Engineers (ITE)
- AASHTO – Standard Specification for Structural Supports for *Highway* Signs, Luminaires and Traffic Signals
- CAN/CSA-S6-00 Canadian Highway Bridge Design Code
- CAN3-CSA22.3 No. 7 Underground Systems
- CAN3-CSA22.3 No. 1 Overhead Systems
- National Electrical Manufactures Association (NEMA) – Traffic Controller Assemblies – TS2
- Canadian Manual of Uniform Traffic Control devices (MUTCD)
- *MMCD* Specifications and Standard Detailed Drawings
- Pedestrian Crossing Control Manual (*TAC*)

10.1.4 Detail drawings and specifications for traffic signals shall be designed by a *Consulting Engineer* with expertise in Electrical Engineering.

10.2 Signal Heads

10.2.1 Types of general locations of signal heads are as follows:

- Primary: Mounted over the *Roadway* which a vehicle is to enter
- Secondary: Mounted to the left of the *Roadway* which a vehicle is to enter
- Auxiliary: Mounted to the right of the primary head, or other location to enhance visibility
- Pedestrian: Mounted on the far side of the intersection in line with the marked crosswalk
- Cyclist: Mounted on the far side of the intersection in line with the marked bicycle crossing

10.3 Visibility

Signal visibility distance is defined as the distance in advance of the stop line from which a signal must be continuously visible for approach speeds varying between 40 and 80 km/h. For speeds exceeding 80 km/h, the minimum visibility distance must equal or exceed the minimum stopping sight distance. Visibility distance guidelines are shown in the table below:

85th Percentile Speed (km/h)	Minimum Visibility (m)	Desirable Visibility (m)	Add for % Downgrade (m)		Subtract for % Upgrade (m)	
			5%	10%	5%	10%
40	65	100	3	6	3	5
50	85	125	5	9	3	6
60	110	160	7	16	5	9
70	135	195	11	23	8	9
80	165	235	15	37	11	20

10.3.1 Cone of Vision

Visibility of a signal head is influenced by three factors:

- Vertical, horizontal and longitudinal position of the signal head
- Height of driver's eye
- Windshield area

Lateral vision is considered to be excellent within 5° of either side of the centerline of the eye position (10° cone) and adequate within 20° (40° cone). Horizontal signal position shall therefore be as follows:

- Primary heads within the 10° cone
- Secondary heads within the 40° cone

Vertical vision is limited by the top of the windshield. Signal heads shall be placed within a 15° vertical sight line. Overhead signals shall be located a minimum of 15 m beyond the stop line. Refer to MUTCD for additional details.

10.3.2 High Vehicles

Drivers of vehicles following high vehicles must be able to see at least one signal head upon reaching the dilemma point.

The dilemma point is defined as the location where a driver seeing the signal indication change from green to yellow must decide either to bring the vehicle to a safe stop or proceed through and clear the intersection prior to the start of the conflicting green. Factors to consider in assessing signal head visibility are *Road* geometry, design speed, spacing between vehicles, and horizontal and vertical signal head locations.

10.3.3 Environmental

Signal heads need to stand out from the surroundings in order to prevent confusion due to distractions. All traffic signal heads shall be equipped with backboards. Backboards shall be yellow aluminum and supplied with 76.2 mm (3") wide Diamond Grade fluorescent yellow retro-reflective tape border on the backboard facing approaching traffic to increase signal visibility.

10.3.4 Flash Rates

The effectiveness of flashing signals is influenced by flash rates. Recommended rates are:

- Red and amber rates: 50 to 60 flashes/minute
- Arrows: 100 to 120 flashes/minute

The ON and OFF periods shall ~~should~~ be equal.

10.3.5 Size

Signal head sizes are to be as indicated in the table below:

Signal Head Type	Area Classification	Lens Size and Shape
Primary	All areas	300 mm round
Secondary	All areas	300 mm round
Auxiliary	All areas	300 mm round
Pedestrian	All Areas	Combination walk/don't walk indication 300 mm square vertically stacked with countdown timer

10.3.6 Visors

Visors are required on all signal heads. Cowl-type visors are standard, except in the following cases, where tunnel visors are required:

- Fully protected left turn signal heads
- At skewed intersections, where the signal heads may be viewed from other approaches

10.4 Light Sources

All new and upgraded signal heads, including pedestrian signals, shall use LED lamps. All lamps shall conform to ITE standards.

10.5 Signal Head Placement

Signals shall be mounted on poles, davits, mast arms or gantries.

Mounting heights are as indicted in *MMCD* standard detailed drawings and as follows:

- Signals mounted above *Roadways* shall provide a minimum 5.5 m clearance
- Auxiliary signals shall be mounted at any height that meets visibility requirements and is between 2.5 m and 5.5 m above the *Road*.

Each approach to an intersection requires a minimum of one primary and one secondary traffic signal head. Requirements for additional signal heads are outlined in Section 10.21 of this Design Criteria Manual. The following table identifies the number and location of primary heads for both through lanes and left turn lanes.

Straight Through Lanes		
Number of Lanes	**Number of Primary Heads**	**Placement of Primary Heads**
1	1	Centered over through lane
2	2	Centered over each through lane
3	3	Centered over each through lane

Left Turn Lanes		
Left Turn Type	**Primary Head Type**	**Placement of Primary Heads**
Protected/Permissive	Flashing Green Arrow, Steady Yellow Arrow and Steady Green Ball	Centered over left-most through lane
Protected – Single Left Turn Lane	Steady Green Arrow	Centered on the left turn lane, either post mounted in median or overhead arm mounted
Protected – Dual Left Turn	Steady Green Arrow	Centered on the left turn lane, either post mounted in median or overhead arm mounted

10.6 Pole Placement

Signal poles shall be placed between 1.2 m and 3.0 m from the face of curb or edge of pavement, preferably behind the *Sidewalk*. Pole arms shall be oriented at 90° to the centerline of the *Road*, except where the intersection is skewed. When laying out a skewed intersection, ensure the arms do not block the view of the signal heads.

Other considerations for pole placement are:

- Ease of access to push button for all pedestrians, including handicapped or visually impaired pedestrians
- Arm reach to ensure head is over lane center or lane markings as appropriate
- Minimizing the number of poles is required
- Limiting number of heads on a poles shaft to four

10.7 Left Turn Phasing

Left turn phasing options at signalized intersections are as follows:

- Permissive – Green ball display. A Permissive left turn has no signal indication other than a green ball, which permits a left turn when opposing traffic is clear.
- Protected – Green Arrow Display. A Protected left turn presents a continuous green arrow indication while all opposing traffic is held by a red ball. A Protected Left Turn is always terminated with a yellow ball.
- Protected/Permissive – Yellow/flashing green arrow display. A Protected/Permissive left turn presents a flashing green arrow followed by a green ball. During the flashing phase (advanced movement), opposing through traffic is held by a red ball. After the advance has timed out, left turn traffic is presented with a green ball permitting the movement when conflicting traffic is clear. The protected phase of this movement is always terminated with a non-flashing yellow indication.

Protected left turns are typically used in the following circumstances:

- Permissive left turns are deemed hazardous due to gap judgment difficulty caused by high speed, geometrics or visibility
- Dual left turn lanes
- High pedestrian volumes
- High accident experience
- Left turn phase is in a lead-lag operation

Protected/Permissive left turns are appropriate in cases where:

- Peak hour left turn traffic volumes justify the movement
- Left turn delays are a concern
- Accident experience dictates

Care shall be taken when considering a left turn phase, as it could cause delays at the intersection by increasing the total cycle length.

10.8 Advance Warning Flashers

Advanced warning flashers shall be used where sight distance to an intersection is less than optimal, or where the design speed of the *Road* is sufficiently high to justify warning motorists of signal status. Information regarding the appropriate installation of these devices can be found in the following guidelines:

- *Warning Flashers: Guideline for Application and Installation (TAC)*
- *Electrical and Traffic Engineering Manual (BC MoTI)*

10.9 Signal Pre-Emption

10.9.1 Rail Crossing Interconnection

Traffic signals in close proximity to rail crossings require interconnection with the rail crossing controls to ensure maximum driver safety, in accordance with Transport Canada's Grade Crossing Regulations and Grade Crossing Standards.

10.9.2 Emergency Vehicle Pre-Emption

The *City* requires emergency vehicle pre-emption to override normal signal operation and provide continuous green signals for emergency vehicles such as fire department and ambulances. More details are provided later in this section. Any exemption from pre-emption requirements requires approval of the *City Engineer*.

10.10 Audible Pedestrian Signals

Audible pedestrian signals are required to assist visually impaired pedestrians. The signal is interconnected with the walk signal, and produces a "cuckoo" or "chirp" sound, depending on the direction of crossing. The cuckoo sound is used for north-south crossings and the chirp is used for east-west crossings. Where the streets are not oriented north-south and east-west, maintain consistency with adjacent signals.

10.11 Control Types

The principal types of signal control are pre-timed (fixed time) and traffic actuated. Traffic actuated controls are categorized as fully actuated, semi-actuated and volume density control. The types to be used will be determined by the *City Engineer*.

Pre-timed controls assign the *SRW* at an intersection according to a predetermined schedule. The time interval for each signal indication is fixed according to this schedule.

Fully actuated controls require traffic detectors for all phases, with each phase timed according to preset parameters. Fully actuated controls allow for the maximum flexibility of signal control.

Semi actuated controls typically have detectors only on the minor street approaches. Semi actuated controls are effective in coordinated systems, and intersections where the major street has relatively uniform flows and the minor street has low volumes with random peaks.

Volume Density control is another type of actuated control appropriate for major high-speed *Roads* with unpredictable fluctuations. This type of control has certain advantages and may be required by the *City Engineer* under certain circumstances.

10.12 Detection Methods

Traffic detection for signal actuation is typically accomplished through one of the following methods:

- Vehicle detector loops (induction)
- Image sensor (video detector system)

The method to be used will be determined by the *City Engineer*. When the traffic signal is located on a bike route, bicycle detection shall also be included.

A vehicle detector loop is a coil of wire buried in the *Road* surface. The coil detects the presence of a vehicle by the change in electrical induction. This change is sensed by the detector module in the traffic control cabinet. Detector loop locations and details are indicated in the *MMCD* Standard Detail Drawings and this Design Criteria Manual.

The image sensor system is a video detection system using cameras and computer software to send signals to the traffic controller.

10.13 Signal Timing Plans

Calculation methods and clearance times shall be in accordance with:

1. City of Langley Traffic Signal Timing Practices review;
2. MOTI Electrical and Traffic Engineering Manual; and
3. Manual of Uniform Traffic Control Devices (*TAC*).

10.14 Signal Coordination

Road capacity and/or driver convenience can be improved on some traffic corridors by implementing a system to coordinate or synchronize traffic signal operation.

Coordination systems operate by coordinating the timing on some traffic signal controller with the timing plans of the adjacent controllers using the controller clocks. Timing “offsets” between intersections are based on distance and design speed. Signal controller clocks can be synchronized using radio signals, telephone connections or hard-wire interconnections between intersections.

The most effective coordination systems include a master controller which is in synchronization and remote adjustment of system parameters.

The *City Engineer* may require traffic signals be coordinated along *Arterial* and major *Collector Roads* to provide for smooth movement of traffic with minimal stops to reduce traffic delays. A detailed traffic study is required to determine the potential effectiveness of a coordination system.

10.15 Pedestrian Controlled Signal

There are two types of pedestrian controlled signals, a Full Signal with green-yellow-red indication, and a Special Crosswalk Signal. The requirement for a pedestrian signal and the type of signal to be installed will be established based on warrant information as indicated in the Pedestrian Crossing Control Manual (*TAC*), or as required by the *City Engineer*.

Pedestrian signals serve pedestrian traffic only, and are generally in areas of high pedestrian traffic or in school zones.

10.16 Pole Loading

Traffic signal poles are to be designed to accommodate the weight of the arms and the items mounted on the pole, as well as wind and ice loading, arm length, anchor bolt size and concrete base size.

The Ministry of Transportation and Infrastructure has made available a load calculator spreadsheet, based on their standard equipment. Designers are encouraged to use the Ministry of Transportation and Infrastructure's Pole Capacity spreadsheet for their calculations; however, this spreadsheet is designed for the Ministry's standard poles, arms and bases. It is the designer's responsibility to ensure that the pole/base combinations used are appropriate for local conditions.

10.17 Traffic Signal Controls

10.17.1 Controllers

Traffic signal controllers shall be NEMA TS2. The choice of manufacturer is to be approved by the *City Engineer* with due consideration for the models already in use, availability of spare parts and experience of maintenance personnel.

10.17.2 Controller Cabinets

Controller cabinets are available in various sizes and styles depending on equipment requirements. *MMCD* standards include details of cabinet and base sizes and installation methods.

Cabinets shall be located entirely within the *Road SRW*, including maintenance pad and door swing. Location shall be behind the *Sidewalk*, with access door on the side away from the *Sidewalk* and the signals visible from the access.

Cabinets shall be heavy gauge, all welded aluminum with powder coat exterior finish, with colour as approved by the *City Engineer*.

10.17.3 Uninterruptible Power Supply (UPS)

A UPS shall be installed on all new traffic signal installations. The UPS shall be mounted on its own separate concrete base. The duration of operation flash period during a power failure will define the UPS size and number of batteries required.

- The *City* will procure and supply the UPS equipment as required at no charge to the signal *Contractor* for installation. If the signal is required as part of a *Development*, then the *Applicant* may be charged for the supply of the equipment.

10.18 Wiring Requirements

10.18.1 Wiring for the traffic signal must accommodate the following stipulations:

- Signal wiring and conduits shall include:
  - a minimum of 3 - 78 mm RPVC conduits on each leg of the intersection when open trenching is used.
  - a minimum of 4 – 53 mm RPVC conduits on each leg of the intersection when directional drilling is used.
- Shall apply 40% conduit fill rule.
- Common circuit wiring shall be taped together & tagged. Traffic signal common conductors to be kept separate from streetlighting common conductors.
- Traffic signal cable shall meet *CSA Spec C22.2 No. 239-97*. Stranded conductors shall be used in the cable. Typical signal cable to be 19 conductors for full phasing functions.

- Color coding of conductors as per Canadian Electrical Code. Taping of power wiring for identification is not acceptable.
- Splicing of signal phase wiring and emergency pre-emption cables in signal pole hand holes only.
- No splicing of video, radio antenna, or detector loop wiring.
- No cutting or drilling of the enclosure for the traffic controller cabinet.

10.19 Calculations

10.19.1 As a minimum, the calculations required for each traffic signal location include:

- Lighting calculations for the intersection (Intersection is defined as the area bounded by the outer crosswalk markings)
- Pole loading
- Service Panel Loading
- Cone of vision calculations

These calculations and a Signal Timing Plan shall be included with the submitted design drawings.

10.20 Traffic Signal Poles

10.20.1 Colour for downtown area poles shall be Spectrum XP Black Texture Product Code: BK70-XTP385 (or equal). Poles shall be galvanized, powder coated and textured semi-gloss.

10.20.2 Colour for poles outside of downtown area shall be Tiger Drylac RAL 7035 gray or equal. Poles shall be galvanized and powder coated. For new installations, poles shall be cantilever design. For existing installations, discuss pole type with the *City Engineer*.

10.20.3 Contact the *City Engineer* to confirm pole location area for correct finish.

10.21 Traffic Signal Housings

10.21.1 Yellow Polycarbonate housings. To fit 300 mm diameter LED modules. Acceptable brands: Fortran Traffic or Eagle.

10.21.2 Overhead signal heads shall be equipped with cowl visors (unless intersection streets don't intersect at typical 90º angle – consult with the *City Engineer* for determination) and mounted with CAN-BRAC Universal Signal Assembly signal brackets (dual stainless steel cable models). See *MMCD* 2019 Edition, drawing. E5.9.

10.21.3 Secondary traffic signal heads shall be equipped with tunnel visors with the exception of bimodal arrows. Secondary / side of pole heads shall be mounted with side of pole brackets. Use *MMCD* 2019 Edition, drawing. E5.4 (Method 3) to mount heads. (Secondary head shall be mounted above pedestrian signal heads). Pole plates shall be bolted to shaft. Signal cable can enter assembly through pole plate. (Use signal bracket to mount secondary/tertiary traffic signal heads if curvature of signal pole prevents mounting with side of pole brackets).

10.21.4 All traffic signal heads to have Yellow aluminum backboards complete with 76 mm wide 3M Fluorescent Yellow Diamond Grade retro-reflective tape around the perimeter of backboard on the side facing approaching traffic.

10.22 Pedestrian Signal Housings

Yellow Polycarbonate housings. Vertically stacked (as required) to fit 300 mm square LED modules. Acceptable brands: Fortran Traffic or Eagle.

10.23 Traffic Signal LED Modules

300 mm Lens LED modules. Acceptable brands: Dialite or GE.

10.24 Pedestrian Signal LED Modules

300 mm square LED modules – Canadian style combination outline Hand/Man. Acceptable brands: Dialite or GE.

10.25 Pedestrian Countdown Modules

Dialite or GE – 300 mm square Double Row LED. Countdown modules shall be installed on new signals or signals to be rebuilt.

10.26 Detector Loops

See “Detector Loop Dimensions” drawing in Section 15.4 (Electrical Details).

10.27 Bicycle Detector Loops

1.2 m L x 0.6 m W rectangular loop.

10.28 Pedestrian and Cyclist Pushbuttons

10.28.1 Pedestrian buttons/housings shall be installed in the field and located on the closest “pole flat” parallel to the crosswalk the button calls.

- Pedestrian pushbutton shall be 1.07 m from the center of the pushbutton to *Sidewalk* grade.
- All pedestrian pushbuttons shall be Accessible Pedestrian Signal (APS) type.
  - Prior to installing an APS pushbutton, the *Consulting Engineer* shall consult with the *City Engineer* to confirm an appropriate product has been selected.

10.28.2 Cyclist pushbuttons shall be installed on bicycle routes.

- Cyclist pushbuttons or another detection system shall be provided at or in advance of the traffic signal.

  Where a heavy volume of cyclists is present or where a pushbutton cannot be provided in an accessible location, the *Consulting Engineer* shall consult the *City* for using a suitable detection system for cyclists (e.g., micro-radar, camera, or loops).
- Cyclist pushbutton shall be installed on a pole located at the end of the curb radius or where a cyclist does not have to dismount or be rerouted out of the way or onto the *Sidewalk* to push the button.
- Signage shall supplement the signal to alert cyclists of the required activation to prompt the green phase.
- Cyclist pushbutton shall be 1.07 m, from the center of the pushbutton, to cyclist grade.

10.29 Traffic Signal Cabinets & Internal Components

The *City* will procure and supply the signal cabinet and internal components (including controller) at no charge to the signal *Contractor* for installation. (If the signal is required as part of a *Development*, then the *Applicant* may be charged for the supply of the equipment).

10.30 Signal Pre-emption Equipment

The *City* will procure and supply the EMTRAC Traffic Detection Systems equipment to the signal *Contractor* for installation at no cost to the *Contractor*. If the signal is required as part of a *Development*, then the *Applicant* will be charged for the supply of the equipment. *Contractor* to supply EMTRAC detector cable. Pre-emption cables shall be continuous from controller to head. No splices allowed.

10.31 Signal Communications Equipment

The *City* will procure and supply the Radio equipment at no charge to the signal *Contractor* for installation. (If the signal is required as part of a *Development*, then the *Applicant* may be charged for the supply of the equipment).

10.32 Street Name Signs on Signal Arms or Pole Shaft

The *City* will provide the street name sign blades to the signal *Contractor* at no charge for installation. Signs for new or rebuilt signals shall be affixed with CAN-BRAC Universal Sign Bracket Assembly (dual stainless steel cable models). Sign blade backing plate extrusion to fit width of sign. Holes shall not be drilled in signal pole arms or shafts for sign installation.

10.33 Traffic Signal Junction Boxes and Sizes

10.33.1 Traffic signal loops shall be spliced in “Oldcastle” – Duralite 1118-18 c/w Tier 2 lid;

10.33.2 Traffic signal cables shall be pulled through “Oldcastle” – Duralite 2436-24 c/w Tier 2 lid in 2 pieces;

10.33.3 Traffic signal cables from cabinet shall be pulled through 1.2 mx1.2 m concrete vault c/w steel lid as per *MMCD*; and

10.33.4 All junction boxes shall have:

- Stamped “C.O.L.” on cover
- Bolted down with “Penta” Security bolts
- Drain rock at bottom and surrounding area.

10.34 Traffic Signal Start-up and Acceptance Period

The *City Engineer* shall be contacted to have *City*’s Traffic Signal Maintenance *Contractor* inspect the traffic signal installation for approval. The *City*’s appointed signal inspection representative is to ensure that the installation is acceptable for inclusion in the *City*’s traffic signal inventory and for maintenance. The warranty will begin once the traffic signal has been accepted by the *City*.

10.35 Traffic Signal Standard Phasing Arrangement

10.35.1 8 Phase Dual Ring Configuration

Eastbound – Phase 2	Eastbound Left Turn – Phase 5
Westbound – Phase 6	Westbound Left Turn – Phase 1
Northbound – Phase 8	Northbound Left Turn – Phase 3
Southbound – Phase 4	Southbound Left Turn – Phase 7

10.36 Traffic Signal Loop and Detector Channel Assignment

10.36.1 The *City* requires a record of its traffic signal loop and detector channel / phase assignments.

10.36.2 Loop Numbers shall start in the northwest corner. Start from the curb lane at the stop bar and number sequentially front to back in a clockwise direction.

10.36.3 Detector Channels – detector channels programmed to correspond to traffic direction and detector grouping on the detector rack. The *City* will supply a Detector Assignment Sheet shall be followed for new or signals to be rebuilt. Contact the *City* if explanation is required.

10.37 Pedestrian Walk Clearance Speed

Standard walking speed is 1.0 meters per second. Pedestrian walking speeds in the downtown *Commercial* area, adjacent to elementary schools and senior areas is 0.8 meter per second.

SECTION 11.0 – Specifications and Standards for Landscaping

11.1 General

11.1.1 All projects within the *City* shall follow the requirements set in the *City*'s Subdivision and Development Servicing Bylaw 2020, No.3126 to protect trees during construction.

11.1.2 *Applicants* for *Subdivision/Development* shall submit a plan, clearly showing all existing landscape features, property lines and municipal infrastructure in the vicinity of their off-site (on *City* property) *Landscaping* plan.

11.1.3 Landscape plans shall comply with the latest editions of the Canadian Landscape Standard, and this Design Criteria Manual. A Consulting *Landscape Architect* or other *City Engineer* approved professional shall prepare drawings and planting specifications for street trees, *Boulevards*, median *Plantings* and any other landscape plans required by the *City*. All landscape plans must be approved by the *City Engineer* prior to any work being undertaken on the site.

11.1.4 When the landscape design includes plants, they shall be low growing, low maintenance, and drought tolerant perennials and grasses that are well suited for BC Climate. Final selection and arrangement of species shall be based on criteria including size, texture, colour, shade tolerance, drought tolerance, disease resistance and seasonal interest. The use of native plant materials is encouraged where appropriate.

11.1.5 No individual soil pits will be accepted. Soil beds and trenches shall be consistent and continuous, and achieve soil volume target as outlined in this Design Criteria Manual.

11.1.6 Unless otherwise approved by the *City Engineer*, artificial turf shall not be used for *Landscaping Boulevards*.

11.2 *Boulevard* Tree, Shrub, and Groundcover Grass Planting

11.2.1 *Boulevard* trees, shrubs, and groundcovers are required, unless approved otherwise by the *City Engineer*.

11.2.2 A preliminary planting plan shall be submitted along with the engineering plans for *Works and Services* to assess potential conflicts with designs for *Works and Services*. Prior to any planting of shrubs/trees, a final planting plan shall be submitted by the *Landscape Architect*. This plan shall account for As-Built locations of installed *Municipal Works and Services* as well as driveways.

11.3 Median Tree, Shrub, and Groundcover Planting

11.3.1 Unless otherwise approved by the *City Engineer*, medians wider than 1.5 m between back of the curbs and longer than 6 m shall be filled with growing medium, leveled and planted with trees, shrubs, perennials, grasses, and groundcovers.

11.3.2 Landscape medians shall have a 450 mm wide splash strip adjacent to the curb and automatic irrigation in accordance with Section 15.4 - Supplementary Specifications and Drawings.

11.4 *Boulevard* and Median Planting Specifications

11.4.1 Design of *Boulevard* and median tree planting shall be prepared by a *Landscape Architect* registered with the BC Society of Landscape Architects.

11.4.2 In general, the *City* aims to select trees suitable for the site while considering the existing overhead utility/power lines, balancing constraints for available space for soil, traffic site lines/visibility, underground utilities, or other relevant considerations.

11.4.3 Planting shall consist of street trees, grass, and shrubs.

11.4.4 A minimum 6.0 cm caliper “street” tree (measured 30 cm above grade) shall be required. The species, spacing and location, shall be as per the specifications included in this Design Criteria Manual.

11.4.5 Underground service locations must be determined prior to planting (BC One Call).

11.4.6 All perennials, grasses, and shrubs shall be of a maximum mature height of 1 m to ensure clear view lines for traffic and pedestrian safety. Final selection, supply and installation of all *Landscaping* designs shall be to the satisfaction of the *City Engineer*.

11.4.7 In selecting the species of trees to be used on a given street the *Landscape Architect* shall give due consideration to mixing varieties for the purpose of controlling the spread of disease.

11.4.8 All Trees must meet the plant condition and structure requirements set out in the latest edition of the Canadian Landscape Standard and the "Canadian Standards for Nursery Stock" (CNTA) to be considered acceptable by the *City Engineer*.

11.4.9 All planting materials must be planted and maintained in accordance with the requirements set out in the latest edition of the Canadian Landscape Standard.

11.4.10 *Boulevard* and median *Plantings* shall be designed to fill in as a mass planting with no exposed soil within three growing seasons.

11.4.11 Replacement Trees shall:

- Have a single dominate leader, full and symmetrical.
- Be balled and burlapped, and/or in wire cages (container trees or bare root tree stocks will be rejected).
- Have the nursery tag displaying genus and species left on the tree after planting,
- Be free of any girdling roots.
- Be installed with a tree trunk protector, unless the tree is installed in a tree grate.
- Be planted according to International Society of Arboriculture (ISA) best management practices.

11.4.12 Plant Spacing

- All trees shall be planted within reasonable distance to respect the mature canopy sizes of the trees, including neighbouring site trees, and recognize the impact of their own mature canopy size on adjacent site features.
- Typically, *Boulevard* trees shall be spaced approximately 9 to 12 meters apart depending on the species used in the design.
- Locations shall be staked out by the *Consulting Engineer* in accordance with the accepted plans and verified on site by the *City Engineer* prior to planting. If underground obstructions are uncovered, they shall be reported to the *City Engineer* for resolution.

11.4.13 Root Barriers

- Install root barrier adjacent to underground utilities and hard surfaces vulnerable to root heave.

11.5 Minimum Soil Requirements for Shrub and Tree Planting

11.5.1 Unless otherwise required by the *City Engineer*, a minimum 0.5 m depth for shrubs is required.

11.5.2 A minimum 0.8 m depth shall be used for trees in *Boulevard* strip locations between curb and *Sidewalk* as well as traffic medians.

11.5.3 Tree planting trenches shall be:

- Filled with a *City* approved growing medium; and
- Continuous except at driveway crossings, streetlights, transformers and other utility structures.

11.5.4 Soft Surface Tree Planting:

The following lists recommended soil volumes for different tree size categories. These recommended numbers shall be used as guidance only and site specific requirements shall be confirmed with the *City Engineer* prior to preparing the *Landscaping* Plan and Tree Planting drawing:

Tree Size category	Minimum Soil Volume Per Tree
Large (greater than 10 m canopy spread)	30 m^3 (20 m^3 if soil shared by 2 or more trees)
Medium (approximately 10 m canopy spread)	20 m^3 (15 m^3 if shared by 2 or more trees)
Small (less than 6 m canopy spread)	10 m^3

11.5.5 Tree Planting Surrounded by Hard Surface:

- Hard surface *Boulevards*, *Sidewalk*s, and parking areas shall use Deep Root Silva Cell structural frame, or *City* approved equivalent, to meet soil volume requirements for trees while providing the required structural support for adjacent hard surface.
    - A minimum 0.6 m depth shall be used.
    - To calculate the minimum soil volume required per tree using a soil cell system, the area of the canopy at maturity shall be multiplied by 0.6 m. The *Landscape Architect* shall submit a signed and sealed calculation sheet that clearly outlines all the assumptions, including but not limited to, the mature tree canopy size.

      For example, if a tree has a mature canopy radius of 2 m, then 12.56 m^2 is the approximate canopy area (i.e., the area of a circle= πr^2). To calculate the required soil volume for this tree using a soil cell system, multiply soil depth (e.g., 0.6 m) by the calculated canopy area, i.e., 12.65 x 0.6 = 7.5 m^3 of soil will be required.
- Upon approval of the *City Engineer, Structural Soil* can be used when:
    - There is a utility crossing, or
    - The area can accommodate the required space for *Structural Soil* to achieve the volume of required growing medium(soil).

      Note: The minimum required *Structural Soil* volume is 50 m^3 (as only 20% of the *Structural Soil* is growing medium). A reduced structural soil volume of 40 m^3 could be used only if tree roots have access to softscape beyond the structural soil area.

11.6 Minimum Tree Planting Clearances

11.6.1 Unless otherwise approved by the *City Engineer*, the following minimum distance from street feature or furniture shall be maintained:

Street Feature/Furniture	Minimum Separation to *Boulevard* Tree[1]	
	Canopy (m)	Trunk (m)
Lamp Standards	6.0	
Steel/Wooden Poles, Posts & Bollards		3.0
Hydrants		4.0
Catch Basins	2.0	
Manholes, Valve Boxes, Service Boxes		2.5
Water, Storm & Sanitary Sewer Service and Connection locations		3.0
Driveways		3.0
Sidewalk	0.6	
Curb Face	0.75	
Utility Boxes, Transformers, etc.		3.0
Community Mailboxes		3.0
Intersection Corners	In line with 8 m sight triangle as per Section 15.4 - Tree Planting Supplemental Specification Drawings	
SkyTrain Structure[2]	~~10~~5.0 m	
Foundation Wall, Façade, or Second Floor Balcony		
• Very Small/Small Trees and/or Large Shrubs	2.0	
• Medium Trees	3.0	
• Large Trees	4.0	
Other Furniture		3.0

Note: (1) All measurements shall be based on the estimated mature trunk/canopy diameter when setting the minimum required separation.
(2) Ensure TransLink is aware of your work at the planning phase and prior to commencement.

11.6.2 Tree canopies shall be maximum 3 m high within transmission line buffer zones.

11.6.3 No *Retaining Wall*s, footings, fire access, furniture, play equipment, decks, patios, etc. may be placed inside the Tree Protection Zone (TPZ) of protected trees.

11.6.4 Underground service locations (i.e., Gas, Hydro, Telephone, Water, Sewer, etc.) to be determined prior to planting; tree locations shall avoid underground services and utilities and provide the minimum distance as shown in the table above. Damage to utilities will be the *Contractor*'s sole responsibility.

11.7 Species Selection

Unless otherwise approved by the *City Engineer*:

11.7.1 *Landscaping* design shall blend with existing *Plantings* and surrounding landscape. Changes, if necessary, should occur at intersections.

11.7.2 Tree species shall differ from one street to the next.

11.8 Accepted Street Trees

11.8.1 New *Boulevards* greater than 200 m in length shall have more than one tree species.

11.8.2 Tree species selection shall be made in consultation with and to the satisfaction of the *City Engineer*.

11.8.3 Appendix A in this Section provides the list of acceptable street trees for planting on *City* streets.

11.9 Plants not Accepted for Use in Public Landscape Areas

11.9.1 Poisonous plants including, but not limited to, plants listed in Children's Play spaces and Equipment CAN/CSA-Z614-98, shall not be permitted.

11.9.2 Appendix A in this Section provides the list of invasive species and plants that are not accepted for planting in the *City*'s public landscape areas.

11.10 Drainage

11.10.1 Surface and sub-surface *Drainage Systems* shall be provided, as appropriate, for the collection and disposal of storm drainage and subsurface water. Any such *Drainage System* shall be connected to the municipal *Storm Sewer System*. A *Drainage System* shall be provided under soft and hard surfaced street tree planting area. See Section 15.4 – Tree Planting Supplemental Specification Drawings. Drainage works shall comply with the specifications as set out in the BC Landscape Standards.

11.11 Irrigation:

11.11.1 Soft Surface Tree Planting:

- Tree watering bags (Treegator or a *City Engineer* approved equivalent) during dry season is required where an irrigation system is not provided; and
- Watering bags shall be filled twice a week during the growing season.

11.11.2 Tree Planting Surrounded by Hard Surface:

- Subsurface drip Irrigation for all median and hard surface tree Plantings is required. The drip irrigation system shall be designed by an Irrigation Designer certified by the Irrigation Industry Association of British Columbia. The system shall be:
  - Provided by RainBird supplier or a *City Engineer* approved equivalent; and
  - Activated automatically through a timed control system.
- An electronic copy, plus a hard copy of the completed irrigation system record drawings and the irrigation system Operations & Maintenance Manual shall be submitted to the *City Engineer*.
- The *City Engineer* may require an additional and/or separate landscape irrigation system for shrubs, groundcovers, etc.

11.12 Landscape Lighting

11.12.1 At the discretion of the *City Engineer*, conduit from the nearest *City's* electrical outlet to each tree pit shall be provided for all trees planted in hard surfaced street tree planting areas. Lighting systems acceptable to the *City Engineer* may be required. Lighting will not typically be required but may be requested in specific high profile and areas with high pedestrian traffic.

11.13 Tree Grates

11.13.1 Tree grates, where required, shall be Dobney Foundry model LPT -36 cat or LPT -48 cat or *City Engineer* approved equivalent.

11.14 Entry Features

11.14.1 Requests to install entry features including lighting, decorative fencing, *Landscaping*, etc. will require approval from the *City* and be assessed based on drawings prepared by a *Landscape Architect*. The *City* will review these requests and may require additional clauses in the agreement to cover off *Subdivision/Development* costs as well as ongoing maintenance costs.

11.15 *Noxious Weed* Control

11.15.1 Property *Owners* in the *City* shall manage their lands for *Noxious Weeds* and invasive plants as set out in the British Columbia Weed Control Act (BC. Reg. 66/85); as per information supplied by the Invasive Species Councils of British Columbia and Metro Vancouver; British Columbia Ministry of Agriculture's Invasive Plant Alert; and the requirements outlined in this Design Criteria Manual.

11.15.2 Any imported growing media or *Structural Soils* being used for *Boulevard*, median, and/or *Trail* planting shall be free of *Noxious Weeds* (see *City*'s Subdivision and Development Servicing Bylaw 2020, N0. 3126 for the list of *Noxious Weeds*).

11.15.3 If any *Noxious Weed* species become evident during the landscape *Maintenance Period*, they shall be eliminated at the earliest opportunity at the *Applicant*'s cost and by their *Landscape Architect* or arborist.

11.16 Time of Plant and Grass Installation

11.16.1 *Buildings* must be completed prior to planting.

11.16.2 Installation of grass sod in the *Boulevard* shall be undertaken prior to the issuance of an occupancy permit of a *Building* on the adjacent property.

11.16.3 Topsoil and grass in *Boulevards* may be required by the *City Engineer*, where in their opinion, the adjacent land shall not be developed in the near future.

11.17 Tree and Shrub Maintenance

11.17.1 Plants shall be CPTED (Crime Prevention Through Environmental Design) compliant, which means:

- Trees are to be pruned up to 1.8 m.
- Shrubs are to be pruned down to 1.0 m.

Appendix A: Accepted Street Trees & Not Accepted Plants

Table A.1: Accepted Small Trees

Botanical Name	Common Name	Height m	Tree Form	Growth Rate	Shade	Flower	Autumn Colour	Spacing m	Comments
Acer buergeranum	Trident Maple	15-18		Moderate	Open	-	Red Orange	10	Consider for residential compact and rowhouse lots
Acer campestre 'Evelyn'	Queen Elizabeth Maple	8		Moderate	Moderate	-	Yellow	10	Consider for residential compact and rowhouse lots
Acer davidii	Snake Bark Maple	10		Moderate	Dense	-	Yellow Purple	10 - 12	Consider for residential compact and rowhouse lots
Acer griseum	Paperbark Maple	6		Moderate	Open	-	Red	9 - 10	Consider for residential compact and rowhouse lots
Acer negundo	Box Elder	10		Fast	Open	-	Yellow-green	9 - 10	Consider for residential compact and rowhouse lots
Acer palmatum	Japanese Maple	6		Moderate	Open	-	Depends on variety	9 - 10	Consider for residential compact and rowhouse lots
Acer platanoides 'Columnar'	Columnar Maple	13	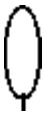	Moderate	Moderate	-	Dark green	9 - 10	Stiff parallel branches
Acer platanoides 'Globosum'	Globe Norway Maple	14		Fairly Rapid	Dense	Yellow	Yellow	10 - 12	Consider for residential compact and rowhouse lots
Amelanchier canadensis	Shadblow Serviceberry	4		Slow	Open	White	Yellow Red	9 - 10	Consider for residential compact and rowhouse lots
Amelanchier laevis	Allegany Serviceberry	5-8		Fairly rapid	Moderate	White	Yellow Red	9 - 10	Consider for residential compact and rowhouse lots

Botanical Name	Common Name	Height m	Tree Form	Growth Rate	Shade	Flower	Autumn Colour	Spacing m	Comments
Carpinus japonica	Japanese Hornbeam	6-10		Moderate	Dense	-	Bronze	9 - 10	Consider for residential compact and rowhouse lots
Chionanthus virginicus	Fringe Tree	3-6		Slow	Moderate	Showy, fragrant white	Yellow	9	All areas but medians
Cornus florida	Flowering Dogwood	6		Moderate	Dense	White	Scarlet	9 - 10	Consider for residential compact and rowhouse lots
Cornus kousa 'Satomi'	Satomi Dogwood	5-10		Moderate	Open	-	-	9 - 10	Consider for residential compact and rowhouse lots
Cornus nuttallii 'Eddie's White Wonder'	Pacific Flowering Dogwood	6		Moderate	Open	White	Red	9 - 10	Consider for residential compact and rowhouse lots
Cornus rutgan	Stellar Pink Dogwood	9		Moderate	Open	Light pink	Bright Red	9 - 10	Consider for residential compact and rowhouse lots
Koelreuteria paniculata	Golden Rain Tree	4.5-7		Slow-moderate	Open	Showy sulphur yellow	Yellow	9	All areas but medians
Magnolia 'Galaxy'	Galaxy Magnolia	6		Moderate	Moderate	Red-purple	Reddish	9 - 10	Consider for residential compact and rowhouse lots
Magnolia kobus	Kobus Magnolia	9		Rapid	Moderate	White	Yellow	10 - 12	Consider for residential compact and rowhouse lots
Magnolia sieboldii	Oyama Magnolia	9-12		Moderate	Moderate	White	Yellow	9 - 10	Consider for residential compact and rowhouse lots
Magnolia x soulangiana	Saucer Magnolia	9		Moderate	Open	White	Yellow	9 - 10	Consider for residential compact and rowhouse lots

Botanical Name	Common Name	Height m	Tree Form	Growth Rate	Shade	Flower	Autumn Colour	Spacing m	Comments
Magnolia stellata	Stellar Pink Magnolia	7		Moderate	Moderate	Pink	Yellow	9 - 10	Consider for residential compact and rowhouse lots
Ostrya virginiana	American Hop Hornbeam	7-12		Slow	Moderate	-	Yellow	9	Seed pods have winter interest, all areas
Parrotia persica	Persian Ironwood	4-8		Slow	Moderate	-	Yellow Orange Red	9 - 10	Only higher branching smaller cultivars to be used as street trees
Prunus serrulata 'Akebono'	Japanese Flowering Cherry	7		Moderate	Moderate	Light pink	Red	10 - 12	Consider for residential compact and rowhouse lots
Stewartia pseudocamellia	Japanese Stewartia	5-8		Slow	Open	White	Orange-red to purple-red	9 - 10	Consider for residential compact and rowhouse lots
Styrax japonicus	Snowdrop Tree	8		Slow to moderate	Open	White	Yellow	9 - 10	Consider for residential compact and rowhouse lots
Styrax obassia	Fragrant Snowbell	7		Moderate	Dense	White	Yellow	9 - 10	Consider for residential compact and rowhouse lots
Syringa reticulata	Ivory Silk Tree	7		Moderate	Moderate	Cream	-	9 - 10	Consider for residential compact and rowhouse lots

Table A.2: Accepted Medium Trees

Botanical Name	Common Name	Height m	Tree Form	Growth Rate	Shade	Flower	Autumn Colour	Spacing m	Comments
Acer x freemanii	Scarlet Sentinel Maple	13		Moderate	Moderate	-		9 - 10	-
Acer platanoides 'Crimson King'	Crimson King Maple	15-25		Moderate	Dense	-	Red Brown	10 - 12	-
Acer platanoides 'Crimson Sentry'	Crimson Sentry Maple	12	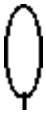	Moderate	Moderate	-	Deep purple	9 - 10	-
Acer platanoides 'Deborah'	Deborah Maple	13		Moderate	Moderate	-	Bronze	9 - 10	Early reddish leaves, turn bronze-green
Acer platanoides 'Drummondii'	Variegated Maple	10		Moderate	Moderate	-	Yellow	9 - 10	-
Acer platanoides 'Emerald Queen'	Emerald Queen Maple	10		Moderate	Moderate	-	Yellow	9 - 10	-
Acer platanoides 'Fairview'	Fairview Maple	15		Moderate	Moderate	-	Yellow	9 - 10	Reddish new growth, bronze-green mature growth
Acer platanoides 'Princeton Gold'	Princeton Gold Maple	13		Moderate	Moderate	-	Yellow	9 - 10	-
Acer platanoides 'Summershade'	Summershade Maples	11		Moderate	Moderate	-	Yellow	12	Light green
Acer pseudoplatanus	Sycamore Maple	12		Moderate	Dense	-	Yellow	10 - 12	-
Acer pseudoplatanus 'Atropurpureum'	Spaethii Maple	12		Moderate	Dense	-	Yellow	10 - 12	Purple underside of green leaf

Botanical Name	Common Name	Height m	Tree Form	Growth Rate	Shade	Flower	Autumn Colour	Spacing m	Comments
Acer rubrum	Red Maple	13		Fairly Rapid	Dense	-	Red	10 - 12	-
Acer rubrum 'Autumn Flame'	Autumn Flame Maple	12		Moderate	Moderate	-	Red	9 - 10	
Acer rubrum 'Bowhall'	Bowhall Maple	13		Moderate	Moderate	-	Yellow orange reddish orange	9 - 10	-
Acer rubrum 'Karpick'	Karpick Maple	15		Moderate	Moderate	-	Yellow to orange	9 - 10	-
Acer rubrum 'Morgan'	Morgan Maple	14		Moderate	Dense	-	Orange-red	10 - 12	-
Acer rubrum 'October Glory'	October Glory Maple	6 - 16		Moderate	Moderate	-	Deep red	9 - 10	-
Acer rubrum 'Red Sunset'	Red Sunset Maple	11		Moderate	Moderate	-	Red	9 - 10	-
Acer truncatum 'Norwegian Sunset'	Norwegian Sunset Maple	14		Moderate	Moderate	-	Red	9 - 10	-
Acer truncatum 'Pacific Sunset'	Pacific Sunset Maple	10		Moderate	Moderate	-	Red	9 - 10	-
Acer x freemanii 'Jeffersred'	Autumn Blaze Maple	10		Moderate	Moderate	-	Orange-red	9 - 10	-
Carpinus betulus	European Hornbeam	13		Moderate	Dense	-	Yellow	9 - 10	-
Carpinus betulus 'Fastigiata'	Pyramidal European Hornbeam	11	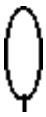	Moderate	-	-	Yellow	9 - 10	-

Botanical Name	Common Name	Height m	Tree Form	Growth Rate	Shade	Flower	Autumn Colour	Spacing m	Comments
Carpinus betulus 'Fastigiata'	Fastigiate Hornbeam	10		Moderate	Dense	-	Yellow	9 - 10	-
Carpinus betulus 'Frans Fontaine'	Frans Fontaine Hornbeam	15	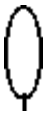	Moderate	Moderate	-	Yellow	9 - 10	-
Catalpa bignoides	Catalpa/Indian Bean Tree	8-12		Moderate-fast	Moderate	Orchid shaped white	Yellow	9	Smaller than speciose, greenways parks
Catalpa bignoides 'Aurea'	Golden Catalpa/Golden Indian Bean Tree	8-12		Moderate-fast	Moderate	Orchid shaped white	Yellow, reddish tinge in spring	9	Smaller than speciose, greenways parks
Cercis canadensis	Eastern Redbud	12		Fairly rapid	Open	Purple pink	Yellow	10 - 12	Some horizontal branching in age
Cladrastis kentukea'	Yellowwood	8-12		Moderate	Moderate	White	Yellow	9	All areas but medians
Cladrastis kentukea Perkins Pink'	Perkin's Pink Yellowwood	8-12		Moderate	Moderate	Pink	Yellow	9	All areas but medians
Fagus sylvatica	Golden Fastigiate Beech	10	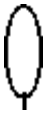	Slow	moderate	-	Yellow	9 - 10	-
Fagus sylvatica 'Fastigiata'	Dawyck Beech	12	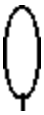	Moderate	Moderate	-	Purple	9 - 10	-
Ginkgo biloba 'Princeton Sentry'	Princeton Sentry Maidenhair	14		Moderate	Open	-	Bright yellow	10 - 12	-
Gleditsia triacanthos 'Halka'	Halka Honey Locust	15		Moderate	Open	-	Yellow	10 - 12	-
Halesia monticola	Mountain Silver Bell	13		Moderate	Open	White	Yellow	10 - 12	-

Botanical Name	Common Name	Height m	Tree Form	Growth Rate	Shade	Flower	Autumn Colour	Spacing m	Comments
Liquidambar styraciflua	American Sweet Gum	12-18		Moderate	Dense	-	Scarlet	10 - 12	Bark deeply furrowed
Liquidambar styraciflua 'Worplesdon'	Worplesdon Sweetgum	10-20		Moderate	Moderate	-	Orange Purple	10 - 12	-
Nyssa sylvatica	Black Gum	13		Slow	Moderate	-	Hot coppery red	10	-
Oxydendrum arboretum	Sourwood	7-12		Very slow	Moderate-Dense	White	Red	9	Stunning fall colour, all areas but medians
Quercus palustris 'Pringreen'	Green Pillar Pin Oak	12-18		Moderate	Moderate	-	-	9	Showy fall colour, all areas
Quercus shumardii	Shumard Oak	10		Moderate	Open	-	Scarlet	10 - 12	For median use only
Zelkova serrata 'Green Vase'	Green Vase Zelkova	25		Fairly rapid	Dense	-	Yellow - orange	10 - 12	Finer textured

Table A.3: Accepted Large Trees

Botanical Name	Common Name	Height m	Tree Form	Growth Rate	Shade	Flower	Autumn Colour	Spacing m	Comments
Acer rubrum 'Autumn Flame'	Autumn Fantasy Maple	15	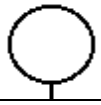	Fast	Moderate	-	Bright red	10 - 12	-
Acer rubrum x freemanii 'Jeffersred'	Autumn Blaze Maple	15	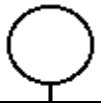	Moderate	Moderate	-	Orange-red	10 - 12	-
Acer saccharum	Sugar Maple	20		Moderate	Dense	-	Yellow Red	10 - 12	Stronger & slower than Norway Maple
Cercidiphyllum japonica	Katsura Tree	15-20	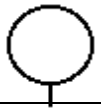	Slow	Open	-	Scarlet	9 - 10	Protect from hot sun and dry wind
Davidia involucrata	Dove Tree	10-20	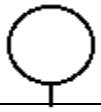	Moderate	Moderate	White	-	10 - 12	Large brown fruit hangs on over winter
Fagus sylvatica	European Beech	10-20	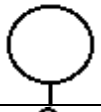	Slow	Dense	-	Bronze	12	Leaves purple or copper
Fagus sylvatica 'Dawyck Purple'	Dawyck Purple Beech	20		Slow	Moderate	-	Dark purple	9 - 10	-
Fagus sylvatica 'Purpurea'	Purple European Beech	10-20		Slow	Dense	-	Bronze	12	Leaves purple or copper
Fagus sylvatica 'Riversii'	Rivers Purple Beech	10-20		Slow	Dense	-	Purple-bronze	12	Purple foliage
Ginkgo biloba	Maidenhair Tree	12-18		Slow	Open	-	Yellow	12	-
Gleditsia triacanthos inermis 'Shademaster'	Honey Locust	10-18		Fairly rapid	Open	-	Yellow	10 - 12	Upright
Gleditsia triacanthos inermis 'Skyline'	Skyline	20		Fairly rapid	Open	-	Yellow	10 - 12	Dark green leaves
Gleditsia triacanthos 'Suncole'	Sunburst Honey Locust	10-18		Fairly rapid	Open	-	Yellow	10 - 12	Yellow

Botanical Name	Common Name	Height m	Tree Form	Growth Rate	Shade	Flower	Autumn Colour	Spacing m	Comments
Magnolia grandiflora	Evergreen Magnolia	20-40		Slow	Moderate	Large creamy	-	9 - 10	-
Phellodendron amurense	Cork Tree	9-14		Moderate	Open	Yellow-green	Yellow	9 - 12	Fragrant leaf, interesting bark
Quercus coccinea	Scarlet Oak	10-22		Moderate	Moderate	-	Scarlet	10 - 12	For median use only
Quercus garryana	Oregon White Oak	6-15		Moderate	Moderate	-	-	10 - 12	Roots non-aggressive, deep[1]
Quercus phellos	Willow Oak	6-20		Fairly rapid	Moderate	-	Yellow	10 - 12	Fine texture foliage[1]
Quercus shumardii	Shumard Oak	15		Moderate	Moderate	-	Red	10 - 12	Dark green foliage[1]
Catalpa speciose (Medium to Large)	Northern Catalpa	12+		Moderate - fast	Moderate	Orchid shaped white	Yellow	9	Greenways parks
Prunus serrulata 'Amanogawa' (Medium to Large)	Amanogawa Cherry	10-22		Moderate	Moderate	Pale pink	Red	10 - 12	Bronze foliage

1- For median use only

Table A4: Plants Not Accepted for Planting in Public Landscape Areas

SHRUBS	COMMON NAME
Buddleia Davidii	Butterfly Bush
Cytisus Scoparius	Scotch Broom
Daphne Laureola	Spurge Laurel
Fallopia Japonica	Japanese knotweed
Heracleum Mantegazzianum	Giant Hogweed
Ilex Aquifolium	English Holly
Pinus Mugo	Mugo Pine
Viburnum Opulus	Snowball Bush
Viburnum Tinus	Laurustina Viburnum
Viburnum Davidii	David Viburnum
Bamboos including but not limited to Arundinaria spp.; Bambusa spp. and Phyllostachys spp.	All Bamboo Plants
PERENNIALS	**COMMON NAME**
Clematis Vitalba	Old man's beard
Foeniculum Vulgare	Common fennel
Impatiens Gladuifera	Policeman's Helmet / Himalayan Balsam
Iris Pseudoacorus	Yellow Flag Iris
Lysimachia Vulgaris	Garden Loosestrife
Lythrium Salicaria	Purple Loosestrife
Nymphaea Odorata	Fragrant Water Lily
Phalaris Arundinacea	Reed Canary Grass/Ribbon Grass
Polygonum Albertii	Silver lace Vine
Senecia Jacobea	Tansy Ragwort
Verbena Honariensis	Purple Verbena
GROUNDCOVERS	**COMMON NAME**
Arctostaphylos Uva Ursa	Kinnickinnick
Festuca Glauca	Blue Fescue Grass
Hedera Helix	English Ivy
Erica spp.	Heaths
Lamiastrum Galeobdolon	Lamium / Yellow Archangel
Rubus Discolor	Himalayan Blackberry
Vinca spp.	Periwinkle

SECTION 12.0 – Construction Drawing Specifications

12.1 General

- All engineering drawings shall be prepared under the supervision of, and be sealed by, a *Consulting Engineer* registered in the Province of British Columbia.
- All tree planting and *Landscaping* drawings shall be sealed by a *Landscape Architect* registered with the British Columbia Society of *Landscape Architects*.
- The *Consulting Engineer* or Consulting *Landscape Architect* shall consult with outside utility agencies where applicable to ensure that the design, construction and installation of the franchise utility infrastructure are possible without interference with proposed *Works and Services*. All revisions to either *Works and Services* or franchise utility designs shall be coordinated by the *Consulting Engineer*. Any further dedications, rights-of-way, easements etc. that are required to provide appropriate franchise utility designs are the responsibility of the *Applicant*; and
- The Consulting *Landscape Architect* shall confirm location of all existing utilities and the adequacy of existing and proposed rights-of-way, prior to final submission of landscape design drawings.
- All construction details that are not covered or specifically detailed in the following construction specifications drawings, shall be provided on the drawings pertinent to the utility. Where there is a *City* standard or detailed drawing a reference to the standard is acceptable.
- All existing structures, including houses, sheds, fences, poles, pole anchors, overhead or underground encroachments, with notations indicating their fate (i.e., to be demolished, removed, filled, etc.).
- All construction drawings shall be A-1 size, i.e., 595 mm x 840 mm outside dimensions, complete with the “City of Langley Title Block”. Sheets are available at the *City* upon request.
- Drawings shall be prepared so that reproductions, as well as reductions, will be clear and legible. Special attention shall be given to layout, lettering, weight of lines and to the care of the tracings.
- Lettering shall be a minimum height of 2.5 mm. Line weights, letter sizes and standard symbols shall conform to *MMCD* 2019 Edition Volume II standard drawing G-1.

Plan and Profile General Information

- Plan and profile drawings for each utility (*Road*, water, sanitary and drainage systems) shall be shown separately on single sheet.
- All dimensions and elevations shall be in meters and sizes in millimeters.
- Plan view be located at the top and profile view to form the bottom half of the drawing.

  The Plan view shall contain the following existing and proposed information:

  - All plans shall be metric.
  - Legal lot layout.
  - Lot numbers and dimensions.
  - Rights-of-way and easements.
  - Curve and angle data.
  - Size, type and offset of all utilities including gas, telephone, hydro and streetlighting
  - All existing water, storm and sanitary services greater than 30 years old identified.

- Offsets related to property line.
- Asphalt, curbs, *Sidewalk*s and letdowns.
- Power poles, light standards and telephone poles.
- Service connections.
- Proposed work in bold lines (see *MMCD* dwg., Section G).
- Existing work in light lines (see *MMCD* dwg., Section G).
- *City* file number in lower right hand corner above the title block.
- Chainages to increase west to east, south to north.
- Length, size, type of pipe and offset of proposed mains.
- Direction of 'north' arrow aligned towards the top right of page.
- Stationing at 20 meter intervals shown at centerline of *SRW*.
- Drawing title.

The Profile view shall contain the following information:

- Existing and finished ground elevations along centerline of *SRW* or centerline of utility.
- Chainage stations:
  - At 20 meter intervals.
  - On an exaggerated vertical scale.
  - Increase from left to right.
  - Align with plan view.
  - Rounded to nearest centimeter.
- Elevations shall be geodetic and rounded to the nearest millimeter.

12.2 Required Drawings

A complete set of construction drawings shall include the following sequence.

i. Cover Sheet

The Cover Sheet shall include:

- Langley file number.
- The *Consulting Engineer's* name, address, phone, fax numbers; and email address.
- *Applicant*'s name, address, phone number, and email address, including contact name, when applicable.
- *Surveyor's* name, address, phone number; and email address.
- The legal description and civic address of the lands involved.
- A location plan showing all proposed *Road*s and proposed *Subdivision* layouts in relation to surrounding lands.

- Drawing index.
- Benchmark location details.

ii. General Construction Notes

- *Consulting Engineers* shall use the *City*'s standard note sheet with design details and specific notes on the appropriate utility sheet.

iii. Key Plan – Scale: minimum 1:2500, (Sheet Number 001)

The Key Plan drawing shall include:

- A plan showing an overview of the *Subdivision/Development* layout with a 'north' arrow on the top right corner of the sheet.
- Where applicable, the trees identified for protection in the *Subdivision/Development* Permit, or *Preliminary Layout Approval Letter* (when applicable).
- All proposed *Works and Services* including service connections, appurtenances such as hydrants, valves, manholes, catch basins, streetlights, street trees, *Trails*, driveways to each *Parcel* and post boxes complete with all offsets, locations and dimensions.
- If more than one sheet is required, note the westerly or southerly portion first and identify as Key Plan "A" with additional plans noted as "B" and "C", etc.
- The *Subdivision/Development* site shall be outlined with a bold line showing lot numbers for all lots
- Legal lot layout.
- Lot numbers & dimensions, rights-of-way, easements, Restrictive Covenants.
- All existing and proposed utilities including gas, hydro and telephone; utility offsets and service connections.
- All third-party utility infrastructures on private properties (e.g., BC Hydro Pad Mounted Transformers, etc.) with their proposed access from the site.
- All existing and proposed *Road*s, *Sidewalk*s, letdowns.
- Existing *Buildings* and structures including off-site structures adjacent to construction.
- Creeks and water courses.

iv. *Road* Works – Scale: plan view 1:500 & profile view (1:500 horizontal & 1:50 vertical), (Sheet Number 101)

At the minimum, shall contain the following information:

- Legend.
- *Road* names and Civic addresses.
- Existing and proposed elevations, grade and locations of:
  - The center line of proposed and existing *Road*s;

- Proposed and existing curbs and gutters and *Sidewalks;*
- All curves at appropriate arc locations;
- All existing and proposed catch basins including rim elevations; and
- Driveway grades, elevations & locations, and wheelchair letdowns.

- Beginning of curve (BC), end of curve (EC), arc length and "k" value design details of all vertical and horizontal curves.
- Crossfall, crown transitions.
- Pole or utility relocations.
- Pavement markings including, arrows, edge of pavement lines, median and traffic movement islands, center line and *lane* markings.
- Show *Infiltration* gallery details for *Road*s where required.
- Show *Amended Soils* on *Boulevard* areas.
- Show dimensions of all *Cul-de-sac* and hammerhead turnarounds.
- Additional sections may be required or requested where large cuts or fills are involved.
- Pole or utility relocations
- Asphalt widths (existing and proposed).
- Curb profile through *Cul-de-sac*.
- Width and grade of *Cul-de-sacs*.
- Emergency access, *Walkway*s, baffles, fencing, gates, stairs with typical cross-sections.
- *Retaining Wall*s.
- Side sloping requirements.

v. *Road* Cross-Sections – Scale: 1:250 horizontal, 1:25 vertical, (Sheet Number 151)

At the minimum, shall contain the following information:

- Required for all *Road* construction including *Walkway*s, lanes and fire accesses.
- Cross-sections every 20 m and shall show proposed construction over existing conditions to 10 m beyond property line of the *Highway*/*Road* allowance.
- Existing driveways affected by construction.
- Property lines (defined and stated).
- Cross-section width to show extent of all side sloping including private property.
- *Retaining Wall*s and details.
- Existing ground profile to be dashed line.
- Existing and proposed elevations at centerline of *Road*.
- Proposed asphalt, curbs, *Sidewalk*s, *Swale*s, etc.
- Extend cross sections to the limits of cut and fill on adjacent properties.

vi. *Integrated Rainwater Management Plan* (*IRWMP*) – Scale 1:500, (Sheet Number 201)

At the minimum, shall contain the following information:

- Legend.
- *Road* names and lot numbers.
- The full catchment area to the nearest adequate downstream connection point for the site to be developed.
- All existing lot corner elevations (un-circled)
- All proposed lot corner elevations (circled)
- The proposed *Minor Flow* (5-year return) complete with inlet and outlet structures, catch basins and connection(s) to existing, adequate *Drainage Systems.*
- Where a site is affected by a *Stream* or other *Watercourses*, the proposed *Building* envelope with the design *MBE* will be noted.
- Where applicable, the proposed post-development *Major Drainage System* flood route(s), with the following items noted on the drawing:
  - Flows in each section;
  - Accumulated flows from all upstream sections; and
  - *Hydraulic grade line*s (*HGL*) in profile.

  Overland or surface flows will be identified with a wide directional arrow complete with connections to existing, adequate downstream *Drainage Systems.* Provision must be made for upstream *Development* potential where applicable.
- A design table noting information for the storm detention facility location, size, volume, area of catchment, release rate and head on orifice, if not tributary to a community detention facility.
- The *Pre-development* and post-de*velopment* contour lines at maximum 0.25 m intervals, extending a minimum 30 m outside the *Development* site.
- Define total catchment area and sub catchment area boundaries (A numbering system for sub catchment areas).
- Designs for on-site *Infiltration*, where applicable.
- A legend noting all items shown on the (*IRWMP*).
- A design table, per Section 15.4 - standard drawings in this Design Criteria Manual noting information for each segment of proposed main including the catchment area (in hectares), run-off coefficients, time of concentration, rainfall intensity, major and minor flow volume, pipe size, slope and capacity both existing and proposed.
- *Watercourses* (e.g., creeks, *Streams*, ponds, lakes, *Swales,* or wetlands) including the required setback boundaries.

vii. Storm Sewers – Scale: plan/profile 1:500 horizontal & 1:50 vertical, (Sheet Number 251)

At the minimum, shall contain the following information:

- Legend.

- *Road* names and lot numbers.
- Existing and proposed contours at 0.25 meter intervals.
- Storm sewer design table for minor and *Major Drainage System*.
- Rainwater detention system, information calculations and construction details, if not provided on the *IRWMP*.
- All storm sewer mains and appurtenances including inspection chambers, manholes, catch basins, inlet and outfall structures etc.
- Storm manhole names (for existing manholes) or numbers (for proposed ones) in both plan and profile.
- Ramp, drop structures or sump manholes.
- Invert direction (north, south, east or west).
- Distance from manhole center to manhole center.
- Rim elevations of all manholes catch basins.
- Diameters of all manholes.
- Pipe size, type, class of pipe, grade, length, and direction of flow.
- Headwalls, culverts.
- Energy dissipation.
- Anchors, separation, encasement.
- *Swale*s.
- Symbols on profile denoting the service connection location and elevations at the property line.
- The full pipe shall be shown on the profile.
- Chainages and invert of each appurtenance shall be shown on profile.
- All crossover points with other sewers, watermains and utilities including clearance and protection details.
- *Watercourses*, creeks, *Stream*s, ponds, lakes wetlands including required setback boundaries.
- At least one property line shall be located by chainage relating to the mains on each sheet.
- Service connection offsets to property lines and inverts.
- *MBE* plan & HGL profile. All *MBE*'s shall to be set above the HGL of the uncontrolled 100-year rainfall *Runoff*. In floodplain areas, all *MBE*'s shall meet the *City*'s Flood Elevation Bylaw, as amended.
- Design for *Amended Soils* on each lot (cross reference to lot grading plan).
- Width of *SRW* if applicable.
- Typical cross sections of the pipes shown on the profile.
- Siltation control shall go to sediment control sheet.

viii. Sanitary Sewers – Scale: plan/profile 1:500 horizontal & 1:50 vertical, (Sheet Number 301)

At the minimum, shall contain the following information:

- Legend.
- Define total catchment area and sub-catchment area boundaries (A numbering system for sub-catchment areas).
- Sanitary manhole names (for existing manholes) or numbers (for proposed ones) in both plan and profile.
- Pipe size, type, class of pipe, grade, length, and direction of flow.
- Sanitary sewer design table.
- All sewer mains and appurtenances including inspection chambers, manholes, etc.
- Symbols on profile denoting the service connection location and elevations at the property line.
- The full pipe shall be shown on the profile.
- Rim elevations of all manholes.
- Ramp, drop structures or sump manholes.
- Invert direction (north, south, east or west).
- Size, type, grade and class of pipe.
- The size, class, type, length and slope of each continuous pipe section.
- Chainages and invert of each appurtenance shall be shown on profile.
- All crossover points with other sewers, watermains and utilities including clearance and protection details.
- *Watercourses*, creeks, *Streams*, ponds, lakes wetlands including required setback boundaries.
- At least one property line shall be located by chainage relating to the mains on each sheet.
- Service connection offsets to property lines and inverts.
- Diameters of all manholes.
- Width of *SRW* if applicable.
- Typical cross sections of the pipes shown on the profile.
- Distance from manhole center to manhole center.
- *MBE* plan & profile. All *MBE*'s shall to be set above the HGL of the uncontrolled 100-year rainfall *Runoff*. In floodplain areas, all *MBE*'s shall meet the *City*'s Flood Elevation Bylaw, as amended.
- *Retaining Wall*s.
- Anchors, separation, encasement.

ix. Watermains – Scale: plan & profile 1:500 horizontal and 1:50 vertical, (Sheet Number 401)

At the minimum, shall contain the following information:

- Legend.
- *Road* names and lot numbers.
- Existing and proposed elevations and locations of:
  - The center line of proposed and existing *Highways;*
  - Proposed and existing curbs and gutters and *Sidewalks; and*
  - Driveway locations.
- Length, size of utility in plan.
- The full pipe shall be shown on the profile.
- All watermains and appurtenances including valves, hydrants, bends, tees, tie-in locations, test points, blow offs, air valves, gate valves, horizontal and vertical bends, to be shown in plan and in profile with station and inverts.
- Thrust blocks in plan and/or thrust restraint calculations.
- Service connections with offsets to property line.
- Anchors, separation, encasement
- All watermain crossover points with sewers and other utilities, including clearance and protection details.
- The size, class, type, length and slope of each continuous watermain pipe section.
- Station and invert of grade breaks in profile
- Show service connection offsets to property line for each lot.

x. Lot Grading Plan – Scale: 1:500 or 1:250, (Sheet Number 501)

At the minimum, shall contain the following information:

- Shall follow recommendations and guidelines set out in the *City*'s Subdivision and Development Servicing Bylaw, Schedule D (Standards for Designing and Preparing Lot Grading), as amended from time to time. This section outlines limitations and procedures to be followed in setting grades and construction practices to be followed by the *Applicant*.
- *Pre-development* ground contours in dashed lines.
- Post-d*evelopment* ground contours (0.25 m max intervals) in solid lines. These contour lines shall match to the *Pre-development* contour lines at the *Development* boundary or as designed by the *Consulting Engineer*. Existing topographic information shall extend a minimum of 1.0 m outside the *Development* boundary.
- Maximum side slopes shall be two horizontal to one vertical unless recommended otherwise by a Professional Geotechnical Engineer.
- A directional arrow on each *Parcel* indicating the prevailing post-d*evelopment* slope of the land.
- Elevations at the corners of each proposed *Parcel*.

- Spot elevations of the neighbouring properties, extended a minimum of 1.0 m from the *Development* property lines.
- Location of the proposed *Building* areas.
- Elevations at the proposed rear *Building* line of each proposed *Parcel*.
- Drainage *Swales*.
- CB's and lawn basins complete with rim elevations.
- Proposed *Retaining Wall*s including height, length, top of wall (TOW), bottom of wall (BOW), elevations, drainage, type of construction, geotechnical details with reports and certifications by qualified geotechnical consultants.

  Note: The *Applicant* shall construct all *Retaining Wall*s that are integral to lot grading designs.
- All areas of cut and fill in excess of 0.5 m deep shall be identified and located clearly and accurately.
- All drainage courses, creeks, *Streams*, ponds and wetland areas with setback boundaries identified and located by legal survey and protected by physical structures such as fences, walls or permanent barriers including signage for Environmentally Sensitive Areas (ESA's).
- Proposed lot drainage patterns.
- Minimum serviceable basement elevation.
- Off site sanitary sewer obvert elevation.
- Carport elevations at required setback from front property lines (maximum elevation on high side of *Road* or minimum elevation on low side of *Road*). Proposed driveway grades in critical locations shall be shown.
- Building or garage slab elevations.
- Existing houses and driveways and elevations adjacent to proposed *Subdivision/Development*.
- Siltation control.

xi. *Landscaping* Plan and Tree Planting – Scale: 1:500 or 1:250, (Sheet Number 601)

At the minimum, shall contain the following information:

- Legal lot layout.
- Rights of way, easements.
- Location of all above ground infrastructure such as hydrants, hydro kiosks, streetlights, signs, post boxes, transformers, service boxes and any other appurtenances affecting the placement and integrity of the proposed street trees.
- Location of light fixtures, proposed signage, utility poles, and mailboxes.
- Underground utilities, etc.
- Locations of service connections to each *Parcel.*
- *Sidewalks*, driveways, letdowns, *Walkways* and paved areas.
- Location, offset, spacing, type etc. of all street trees
- List showing botanical name and common name of all plants to be used

- *Amended Soil* specifications
- Irrigation details if located on public property.
- Numbers and sizes of all plants/trees to be used.
- Planting and installation details of all landscape features.
- Legend and notes.
- Seal and signature of a Consulting *Landscape Architect unless waived by the City Engineer.*

xii. Erosion and Sediment Control (ESC) Plan – Scale: 1:500 or 1:250, (Sheet Number 701)

At the minimum, shall contain the following information:

- Legal lot layout.
- Existing and proposed contours at 0.25 meter intervals and relevant spot elevations.
- Rights of way, easements.
- All above and underground existing services as well as any proposed connections to existing services from the land.
- *Sidewalks*, *Walkways* and paved areas.
- Existing planting and all landscape features.
- The designed sediment discharge limit as specified under the *City's* Watercourse Protection Bylaw No.3152.
- Location(s) of any existing drainage infrastructure and the proposed measures to protect it.
- Location(s) of any existing and proposed watercourses, ditches, swales or any other body of water within 50m of the land boundaries, along with the proposed protection measures.
- Location(s) of any existing/proposed buildings, including residential buildings or ancillary buildings or structures
- Temporary rock access/exit pad detail.
- Wheel wash facilities (if required).
- Temporary soil stockpile cover detail.
- Temporary catch basin and sediment trap detail.
- The name and location of the representative rain gauge to be used for rainfall intensity monitoring.
- QEP's name monitoring, inspecting, and reporting to the *City*, in accordance with the requirements set in this Design Criteria manual.
- Legend and notes.

xiii. <u>Streetlighting, Signage, and *Road* Markings</u> – Scale: 1:500 or 1:250, (Sheet Number 801)

At the minimum, shall contain the following information:

- Legend.
- Specific notes.
- *Subdivision/Development* lot layout, lot numbers, *Roads* and *Sidewalks*.
- *Road* width and classification.
- Street names.
- Land use.
- Pavement markings including, arrows, edge of pavement lines, median and traffic movement islands, center line and lane markings.
- Type of pole (davit/post-top/decorative) make/model/colour, and offset from property lines (Minimum offset from face of pole to face of curb shall be 0.5 m).
- Street and traffic signs including, directional arrows, advance warning signs and checkerboards, street name signs, stop signs, parking restriction signs and traffic advisory signs etc.
- Pedestrian activity/conflict level
- Pole height and type of lamp standard including finishing (i.e., paint, galvanizing, etc.).
- Make, model, wattage and type of luminaire.
- Uniformity ratio.
- Luminaire distribution/light loss factor.
- Colour temperature of light.
- Spacing (maximum).
- Preducting.
- Photometric calculations in in general conformance with Table 9.2 (including design level required vs. achieved & photometric file number) and IES file.
- Location of the existing and proposed service base and hydro service/junction boxes.
- Off-set from property line, and chainages of each lamp standard.
- Lockable hand hole covers.

Note: Signage and seal of a *Consulting Engineer* with expertise in Electrical Engineering on this sheet is required.

Traffic Signal Design (as required)- Scale: 1:250, (Sheet Number 901)

At the minimum, shall contain the following information:

- <u>Intersection lighting</u>
  - *Roadway* classification.
  - Pedestrian conflict level.
  - Colour temperature of luminaire fixtures.
  - Luminaire distribution.
  - Lighting levels required and levels achieved based on latest Illumination Engineers Society of North America (IESNA) RP-8.

- traffic signal design
  - Summary table and circuit loading schedule.
  - Multi-conductor colour coding and cable connection tables.
  - Power supply phases.
  - Lighting load in VA.
  - Traffic controller loads.
  - Additional loads.
  - Main and branch breaker sizes.
  - Signal phasing diagram.
  - Detector / sensor table.
  - Conductor color coding / cable connection table.
  - Traffic controller wiring diagram.
  - UPS controller power conductor colour coding.

Note: Signage and seal of a *Consulting Engineer* with expertise in Electrical Engineering on this sheet is required

12.3 Record (As-Built) Drawings

Record drawings shall be signed and sealed by the *Consulting Engineer,* and shall be submitted in AutoCAD Civil 3D and printable PDF formats and shall include as constructed information on:

- Installed utilities with offsets.
- Road works including: letdowns, curbs, *Sidewalk*s and asphalt widths.
- Geodetic invert of storm and sanitary service connections.
- Service connection offsets referenced to property line.
- Distance measured from nearest downstream manhole to service wye.
- Distance measured from nearest main line valve to corporation stop.
- Utility profile including: inverts, grades, sizes, pipe types, class of pipe, distances.
- Manholes, catch basins, lawn basins.
- Hydrants, valves, tees, blowoffs, bends.
- Rim elevations.

SECTION 13.0 – - STANDARD FORMS

The following forms are available for download at the City website – Applications, Form & Permit:

- ***Highway Use Permit* Application Package**, which consists of:
    - Highway Use Outline of Requirements;
    - *Highway Use Permit* Application;
    - *Highway Use Permit* Designation of Prime *Contractor*; and
    - Lane Closure Request Form.
- **Hydrant Flow Test Form**
- **Hydrant Use Permit Application**
- ***Highway Use Permit* Application - Oversize/ Overweight Vehicle**
- **Noise Bylaw Extension Application**
- **Street Banner Application**
- **Traffic Volume Count Application**

There are also the following forms that are attached below, which form part of the *City*'s Engineering Standards and Specifications.

All references to these forms shall, in each instance, be understood to refer to the latest dated revision as issued by the *City*'s Engineering, Parks & Environment Department.

Commitment by *Owner* and *Consulting Engineer* …….. Form F-1

(shall be included with pre-design information and design drawing submissions.)

Pavement Cut Form …… Form F-2

Landscape Certificate of *Substantial Completion* ……..…… Form F-3

Landscape Final Acceptance Certificate …….. Form F-4

~~**Confirmation of Commitment by Qualified Environmental Professional (QEP)…… Form F-5**~~

Form F-1 Commitment by *Owner* and *Consulting Engineer*

Date: _____

Project Location: _____

This confirms that an agreement has been executed between:

Owner _____ and

Owner's *Consulting Engineer* _____

in connection with the above *Subdivision*/*Development* project and provides for the *Owner*'s *Consulting Engineer* to undertake, directly or through sub-consultants, until a Certificate of *Final Acceptance* has been issued by the *City Engineer* to:

1. review existing systems and design requirements, concepts and parameters with the *City Engineer*;
2. arrange for topographic, pick-up and legal surveys and environmental, geotechnical, hydrogeotechnical, or other studies that may be necessary for satisfactory design or as required by the *City Engineer*;
3. submit conceptual designs if required by the *City Engineer*;
4. submit detailed design plans and specifications in accordance with the *City* bylaws and Design Criteria Manual, and the requirements of utility companies and government agencies and to the satisfaction of the *City Engineer*;
5. provide initial cost estimates and periodic cost estimates of uncompleted work to the *City Engineer* for calculation of security retention;
6. discuss the submissions under 3, 4, and 5 with *City* staff as required by the *City Engineer*;
7. attend pre-construction meeting as required by the *City Engineer*;
8. undertake contract administration services using qualified personnel during construction and the *Maintenance Period* including:
   a) survey control to permit construction layout by *Contractors*;
   b) interpretation of plans and specifications;
   c) periodic, or full time, resident inspection as required by the *City Engineer* to determine if the work substantially complies in all material respects with the approved design and *with the City* bylaws and Design Criteria Manual, and with the requirements of utility companies and government agencies;
   d) giving advance notification of inspections to the *City Engineer*;
   e) review and interpretation of test and inspection reports;
   f) determination, and advising the *City Engineer*, of corrective action required as a result of c) and e);
   g) keeping a record of site visits and any corrective action taken as a result of f);
   h) attending construction progress meetings; and
   i) conducting final inspection to identify deficiencies.
9. submit weekly summary reports during construction and the *Maintenance Period* including

   test and inspection reports and their review and interpretation thereof all as required by the *City Engineer*;
10. submit Inspection Certificates and other certifications required by the *City* bylaws and Design Criteria Manual;

11. conduct inspections with the *City Engineer* as required;
12. submit record drawings, service record cards, asset register, and where applicable, operation and maintenance manuals in the form required by the *City Engineer*.

If sub-consultants, or others with specialist responsibility, are employed on components of the work, the *Owner*'s *Consulting Engineer* will act as the prime consultant for co-coordinating and reviewing overall design, layout and inspection and test reports, and for communicating with the *City Engineer*.

The *City Engineer* may request a summary of project's the *Owner*'s *Consulting Engineer* and/or subconsultants have completed that are similar in scope, nature and value to the *Works and Services*. The summary must include the names, curriculum vitae and employer of individuals assigned responsibility for various aspects of the work.

The *Owner*'s *Consulting Engineer* and each sub-consultant carries professional liability insurance of $1,000,000 per claim with a maximum deductible of $5,000 and commit to continue the insurance throughout construction and the *Maintenance Period*.

We, the *Owner* and *Owner*'s *Consulting Engineer* both acknowledge our separate responsibilities to each and to notify the *City Engineer* as soon as possible prior to, or, if that is not possible, within one working day, if the *Owner*'s *Consulting Engineer* ceases to be retained for all of the duties described or is unable to carry them out. Notification will be in writing delivered to the Municipal office or by email to the *City Engineer*.

I, the *Owner*'s *Consulting Engineer*, will notify the *City Engineer* as soon as possible prior to, or, if that is not possible, within one working day, of a decision or circumstance that results in a sub-consultant or other specialist ceasing to be retained on this project.

Name of *Owner*'s *Consulting Engineer*: _____

Signature of Authorized Representative: _____

Address: _____

_____

_____

I/we the *Owner* will stop construction as soon as it is safe to do so in the event the *Owner*'s *Consulting Engineer* ceases to be retained, or is unable to carry out the described duties, until a new Commitment by *Owner* and *Consulting Engineer* has been delivered to the *City Engineer* and he/she has authorized work to recommence. I/we will continue essential maintenance of the site.

I/we, the *Owner*, understand that the *City* will rely on the expertise of the *Owner*'s *Consulting Engineer* in performing services referred to in this Commitment letter. I/we acknowledge that review and inspections by staff or others on behalf of the *City* do not relieve the *Owner* from complying with the requirements of the bylaws.

Name of *Owner*: _____

Signature of Authorized Representative: _____

Address: _____

_____

Form F-2: Pavement Cut

PERMIT NUMBER:	DATE:

City of Langley Project No.: _____ Design Form ☐
Location: _____
Applicant's Name _____

Pavement Cuts

Address, Station or Off-Set	Cut Type	Length (m)	Width (m) 1.5m or 2.5m	L x (W +0.8m) Area
			Total Area in m^2 =	
Minimum Charge as per *City*'s Fees & Charges Bylaw			**TOTAL =**	$XX.XX

NOTES

The applicant is responsible to notify the *City*'s Engineering Services two weeks prior to commencement of construction for inspection purposes.

Pavement Reinstatement Fee: ($ per m^2, as per *City*'s Fees & Charges Bylaw, as amended)

Pavement Degradation Fee: ($ per m^2, as per *City*'s Fees & Charges Bylaw, as amended)

Trench width calculation must include a minimum of 400 mm on both sides of initial trench cut and to the next lane line or lane centerline.

Use 1.5 m width for ≤ 1.5m deep and 2.5m for > 1.5m deep trench

All temporary restoration works shall comply with the City of Langley Highway Use Permit (HUP). Failure to do so will result in rejecting the HUP and the City will be completing the pavement repair works at the Permittee's expense.

I, the applicant, hereby acknowledge that I have reviewed the *City*'s Pavement Cut requirements outlined in the *City*'s Design Criteria manual and hereby agree to abide by all the terms and conditions of the *City*'s Pavement Cut requirements as outlined in the *City*'s Design Criteria manual.

Inspector:	**Date Measured:**	**Applicant's Signature:**
_____	_____	_____

Cut Type: **ST** – Storm, **SS** – Sanitary, **W** – Water, **G** – Gas, **H** – Hydro, **T** – Telephone, **O** - Other

Form F-3 Offsite Landscape Certificate of *Substantial Completion*

CITY of LANGLEY PROJECT NO.: _____

LOCATION: _____

APPLICANT: _____

ADDRESS: _____

LANDSCAPE ARCHITECT: _____

ADDRESS: _____

This Landscape Certificate of *Substantial Completion* is issued pursuant to Section 10.1 of Schedule B of the City of Langley Subdivision and Development Servicing Bylaw, as amended from time to time.

The *MAINTENANCE PERIOD* for the works shall **begin** on: _____

The *MAINTENANCE PERIOD* for the works shall **expire** on: _____

The Landscape *Final Acceptance* Certificate will be issued:

(i) following the expiration of the *Maintenance Period*; and

(ii) when all deficiencies have been cleared.

The Landscape Certificate of *Substantial Completion* does not constitute acceptance of any of the other *Works and Services* supplied, constructed, or installed by the *Contractor*.

Deficiency List attached: ☐ Yes

☐ No

_____
City Engineer

_____
Date

cc: *Applicant*/Consulting *Landscape Architect*

Form F-4 Offsite Landscape Final Acceptance Certificate

CITY of LANGLEY PROJECT NO.: _____

LOCATION: _____

APPLICANT: _____

ADDRESS: _____

LANDSCAPE ARCHITECT: _____

ADDRESS: _____

This Landscape *Final Acceptance* Certificate is issued pursuant to Section 1.14 of Schedule B of the City of Langley *Subdivision/Development* Bylaw.

The *MAINTENANCE PERIOD* for the works **began** on: _____

The *MAINTENANCE PERIOD* for the works **expired** on: _____

The Landscape *Final Acceptance* Certificate constitutes the acceptance of the landscape *Works and Services* supplied, constructed, or installed by the *Contractor*.

TAKE NOTICE THAT the *Maintenance Period* for the above works is satisfactorily complete and that the *City Engineer* has accepted these works as of:

_____
Date

_____
City Engineer

cc: *Applicant*/Consulting *Landscape Architect*

~~Form F-5 – Confirmation of Commitment by Qualified Environmental Professional (QEP)~~

~~CITY of LANGLEY PROJECT NO.:~~ _____

~~LOCATION:~~ _____

~~DEVELOPER:~~ _____

~~ADDRESS:~~ _____

~~*QEP*:~~ _____

~~ADDRESS:~~ _____

~~I _____ (QEP's Name), confirm that I am a Qualified Professional who is registered and in good standing in British Columbia with the following designations:~~

☐ ~~Agrologist~~ ☐ ~~Applied Technologist or Technician~~ ☐ ~~Professional Biologist~~ ☐ ~~Professional Engineer~~	☐ ~~Professional Forester~~ ☐ ~~Professional Geoscientist~~ ☐ ~~Registered Forest Technologist~~

~~I have been retained by _____ (*Owner/Developer*) and am responsible for inspecting, monitoring and reporting in accordance with the requirements of the City of Langley Design Criteria Manual and Watercourse Protection Bylaw No. 3152.~~

~~I will be monitoring and reporting to Engineering Services at the frequency outlined in the *City*'s Watercourse Protection Bylaw 3152, verifying whether appropriate measures have been taken to comply with the *City* approved *ESC* plan of the above-mentioned project and that I shall take corporate and professional responsibility for the site *ESC* measure compliance.~~

~~I also acknowledge the responsibility to notify the addressee of this letter immediately of the date I cease to be retained by the *Owner* and/or *Developer*.~~

~~Yours truly,~~

~~QEP Signature & Professional Seal (*if applicable*)~~

~~c.c. - _____~~
~~(*Owner/Developer*)~~

SECTION 14.0 - ENVIRONMENT CONTROL OF TREATED WATER

ACTIVITY DESCRIPTION:	Control and neutralization of the flow of chlorinated water, into storm sewer, drainage channels and creeks.
SAFETY:	Read M.S.D.S. for neutralizing product being used. Use rubber gloves, eye protection, and particle mask. May irritate skin.
PRECAUTIONS:	Avoid damages to property while following this procedure.

i. Whenever possible, any flow of chlorinated water escaping from a watermain, for any reason, shall be directed into a sanitary sewer manhole.

ii. If it is not possible to direct the treated water into a sanitary sewer manhole, the treated water must be neutralized before it enters into any fish bearing body of water.

It will be assumed that all drainage channels and mains are either fish bearing bodies of water or are connected to fish bearing bodies of water.

iii. Neutralizing the chlorine in the water will be accomplished through the use of sodium thiosulphate, or other material acceptable to the *City*.

iv. Neutralization is accomplished by causing the escaping water to come into contact with a series of nylon woven bags that contain 2 to 4 kg of sodium thiosulphate.

The attached diagram illustrates a typical arrangement of the bags containing the neutralizing mixture. This arrangement may not be suitable in all situations; it is simply important that the bags be arranged so as to cause the escaping water to come into contact with them.

The number of bags and the volume of sodium thiosulphate will be increased as necessary to achieve complete neutralization of the chlorine or chloramine.

v. It is preferable that the flow of escaping water be kept on the surface as long as possible, before entering any drainage ditch, channel, or main. Flow control shall reflect this consideration, to the degree practical in individual circumstances.

vi. In cases where the chlorinated water is entering into a drainage ditch or channel, it may be necessary to either place neutralizing compound bags into the ditch or channel, or suspend them at a culvert opening that the water is flowing through.

vii. Downstream testing for the presence of chlorine or chloramine must be conducted immediately and continuously. A test shall be taken at 10 to 15 minute intervals.

A log will be completed noting each test. Log information will include date, time, employee number, location, source, cause and test results.

viii. If chlorine or chloramine is detected during downstream testing, it may be neutralized by sprinkling a small amount of sodium thiosulphate over the *Stream* bed. Immediately re-test for the presence of chlorine or chloramine. Increase the number of bags as necessary to achieve total neutralization.

ix. If the escaping water results from unplanned causes, such as a broken watermain or pressure relief valve, immediately establish control of the escaping water. In addition:

a) Immediately assign personnel to test downstream for the presence of chlorine or chloramine.

b) Sprinkle sodium thiosulphate over the *Stream* bed, as necessary, until bags of neutralizing mixture have been placed.

c) Begin logging information immediately, including time of notification of the incident, time of arrival, and all subsequent steps taken to control the water flow, neutralize the chlorine or chloramine, and accomplish the necessary repair.

d) Contact the *City*'s Engineering Operations to notify the Federal Department of Oceans and Fisheries at 1-800-465-4336 **(this is a 24 hour number)** and the provincial Ministry of Environment, Lands, and Parks at 1-800-663-3456. The Engineering Operations will log time of contract with these agencies, and name of contact person.

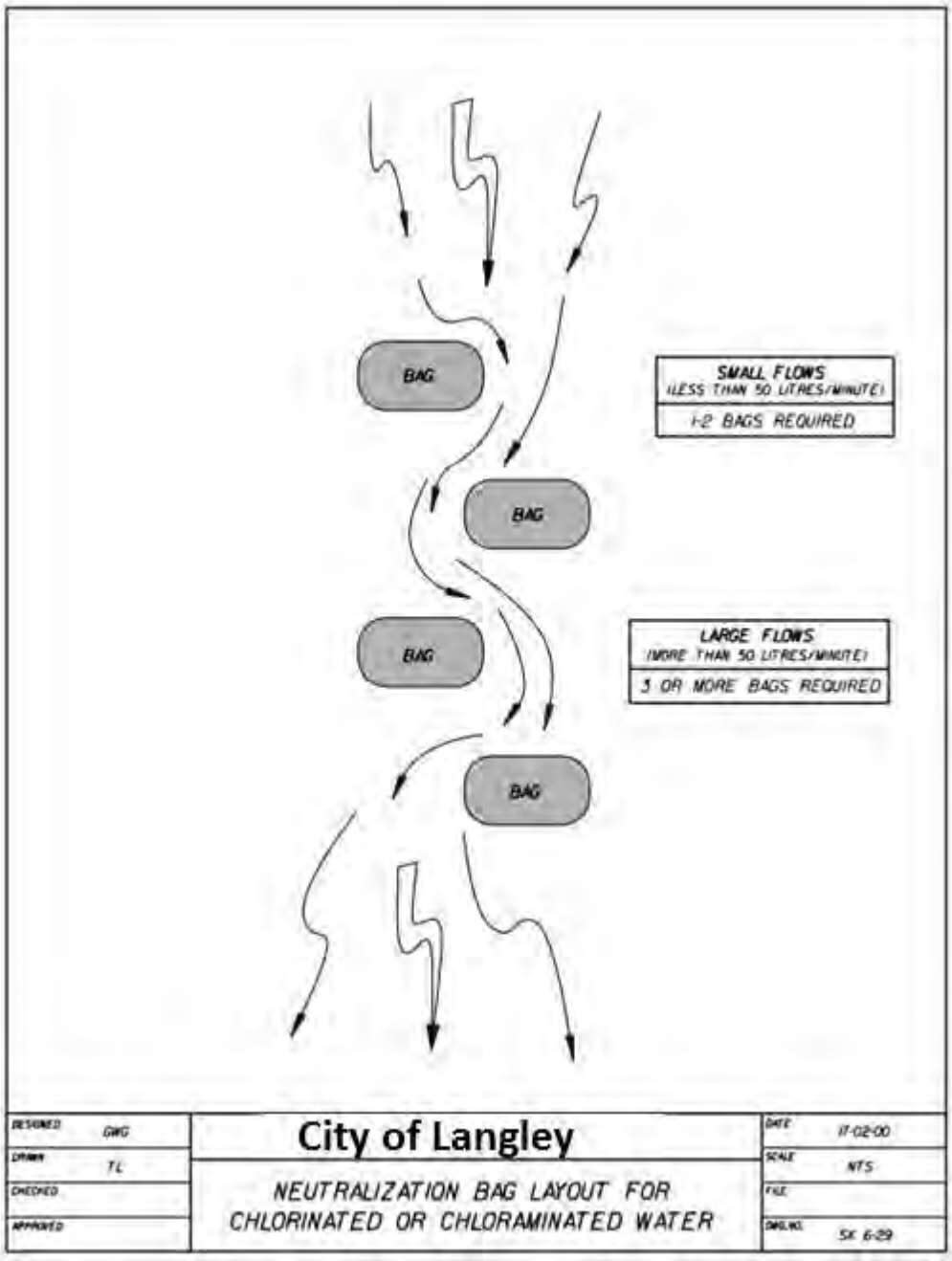

SECTION 15.0 – SUPPLEMENTARY SPECIFICATIONS STANDARDS and DETAIL DRAWINGS

15.1 Construction Specifications and Construction Standard Drawings

- The *City* has adopted the latest edition of *MMCD*. The supplemental specifications listed below is based on *MMCD* – Volume II, Instructions to Tenderers – Part II, General Conditions, Specifications, Standard Detail Drawings, 2019 Edition, published by The Master Municipal Construction Documents Association and printed in 2009 for use on all Engineering contracts and *Development Works and Services*.

15.2 For Works to be Performed under *Servicing Agreement*s

- *MMCD* is written to form part of a contract between an "Owner" and a "Contractor" and the *MMCD* Specifications, either directly or by reference to the General Condition, include references to the respective responsibilities of the "Owner", the "Contractor", and the "Contract Administrator". The applicability of *MMCD* in connection with this Design Criteria Manual is with respective to technical specifications and construction details only, and does not involve the *City* in the contractual relationship that the *Owner/Applicant* of a *Subdivision/Development* has with the *Contractor*(s) hired by the *Owner/Applicant* and that the *Owner/Applicant* has with professional staff, *Consulting Engineers*, or other agents.
- When *Works and Services* are performed under a *Servicing Agreement* in the *City*, wherever the term "Contract Administrator" is used throughout the *MMCD*, it shall read or be the same as the *City Engineer*. Similarly, the term "Owner" in the *MMCD* shall refer to the *Applicant*.
- When *Works and Services* are performed in the *City* and wherever a digital reporting is required throughout the *MMCD*, the digital report shall be submitted to the *City Engineer* in a write-protected USB flash drive.
- Except as specified elsewhere in this Design Criteria Manual, the *City* places full responsibility for design, construction, installation, inspection, testing, and record keeping of the *Work and Services* on the *Owner/Applicant* who is required to hire their *Consulting Engineer* and the *Landscape Architect* to undertake duties in accordance with this Design Criteria Manual, and *MMCD* shall be interpreted in this way.

15.3 Supplementary Specifications, *MMCD* 2019 Edition

To bring *MMCD* specifications into conformance with practices within the *City*, the following amended and additional clauses and standard drawings are to be considered part of the General Specifications and Standard Detail Drawings. These amendments take precedence over *MMCD.*

General Conditions

1.0 DEFINITIONS

1.1 Abnormal Weather

1.1.1 Replace with "Abnormal Weather" means temperature, *Precipitation*, wind or other weather condition, as determined by the Contract Administrator, that prevents the Contractor from proceeding with at least 60% of the normal labour and equipment force, for at least 5 hours on a component of the work, which if delayed is on the critical path of the schedule and as such will delay the completion of the Work.

Add **1.79 Archaeological Artifacts**

Add "1.79.1 Archaeological Artifacts" means any fossils, artifacts, coins, articles of value or antiquity, remains, and other things of geological, archaeological or historical interest or value discovered at the Place of the Work."

4.0 CONTRACTOR

4.12 Tests and Inspections

4.12.1 Replace with "The Contractor is solely responsible for ensuring that the Work is performed in accordance with the requirements of the Contract Documents. The Contractor shall perform or cause to be performed all tests, inspections and approvals of the Work as required by the Contract Documents or as required by the Contract Administrator as part of the Quality Control. Any reference in the specifications to inspection and testing shall mean that the Work described in the specification must be inspected and tested in a manner approved by the Contract Administrator. The Contractor shall only employ or engage, as an agent or consultant for testing, a person approved by the Owner. Where the specification indicates that the Contract Administrator will arrange for testing, the Contractor continues to be solely responsible for testing of the Work. Upon immediate completion of each test, certified copies of each test shall be submitted by the testing laboratory directly to the Contract Administrator. The Contract Administrator may perform additional tests for the Owner's sole benefits. The costs of these tests will be the responsibility of the Owner."

Add "4.12.1.1 The Contractor is responsible for all costs to complete Quality Control testing at the following minimum frequencies:

Asphalt Testing

- Marshall mix testing 400 MT. or at least once per day
- Compaction and temperature testing every 25 meters on newly installed asphalt.

Gravel Testing

- Sieve analysis and proctor test of each gravel types being used at the beginning of project.
- Compaction testing every 50 meters including pipe backfill, subbase and base materials.

Concrete Testing

- Mix and Material testing every 50 M3 being installed or at least once per day.
- Proof Rolling

- As requested by the Owner's site representative provide equipment and labour to conduct a proof roll of a section of the roadway to determine areas of deflection during road works.

  The Owner and Contract Administrator shall be copied on all test results directly from the testing laboratory."

11.0 CONSEALED OR UNKNOWN CONDITIONS

11.4 Acknowledgement

Add "11.4.1 The Contractor acknowledges and agrees that it has not relied on the accuracy or completeness of any data or information provided by or on behalf of the Owner and/or Contract Administrator in assessing the risks of a Concealed or Unknown Condition."

Add "11.4.2 The Contractor acknowledges and agrees that it has conducted its own independent investigation and has taken into account the risks of a Concealed or Unknown Condition.

Section 01 55 00 Traffic Control, Vehicle Access and Parking

1.0 GENERAL

1.0.5 Replace with "Unless alternative arrangements satisfactory to those adversely affected have been made by the Owner, pedestrian and vehicular access to affected properties shall be maintained at all times."

Add "1.0.6 The Contractor is responsible for all temporary traffic control within the project limits. The Contractor will provide a **Traffic Management Plan (TMP**) in accordance to the latest version of the "Traffic Management Manual for Work on Roadways" published by the Ministry of Transportation and Infrastructure (MOTI) to the Contract Administrator for approval, at least five working days prior to any work taking place. TMP must be prepared, signed, and sealed by a Professional Engineer licensed in British Columbia and with proven experience in preparing TMP.

The TMP must outline the approach to traffic management, identify Traffic Control Person(s), show lane shifting and proposed closures (vehicles and/or bike lanes, sidewalks, walkways, etc.), show potential risks and their mitigation measures by proposing proper signing locations at the minimum."

The Contractor must demonstrate the installation of the proposed traffic control signs shall not hinder the free flow of traffic (whether be vehicles, bikes, or pedestrians) outside the areas marked for closure in the TMP.

1.4 Traffic Management

1.4.10.3 Replace with "Supply and erect signages, delineators, barricades and miscellaneous warning devices as specified in the Ministry of Transportation and Infrastructure publication: "Traffic Management Manual for Work on Roadways.", in accordance to the City approved Traffic Management Plan.

Add "1.4.10.3.1 The Contractor is required to supply Construction Zone information signs (stationary). Refer to MMCD 01 58 01 for the required identification signage."

Section 01 57 01 Environmental Protection

1.0 GENERAL

Add "1.0.3 Submit an Erosion and Sediment Control Plan (ESC) to the Contract Administrator at least five working days prior to starting construction. No construction activities shall start until all *ESC* measurements are in place."

1.2 Temporary Erosion and Sediment Controls

1.2.1 Replace with "Properly drain all portions of the site. Protect the site and the watercourses to which it drains, directly or indirectly, against erosion and siltation in accordance with an *ESC* Plan. The Contractor is responsible for all damages that may be caused by water backing up or flowing over, through, from or along any part of the work or otherwise resulting from his /her operations.

Keep existing culverts, drains, ditches and watercourses affected by the work clear of excavated materials at all times. When it is necessary to remove or alter an existing drainage structure, provide suitable alternative measures for handling the drainage.

Sweep streets, and clean catch basin, manhole sumps, detention tanks, and maintain siltation controls as often as the Contract Administrator deems necessary.

The Owner's Qualified Environmental Professional (QEP) is responsible for monitoring ongoing compliance with this section."

1.3 Replace Temporary Pest Controls with:

"**1.3 Duty to Control Noxious Weeds**"

Add "1.3.1 Immediately control and enclose area containing designated weeds as per the BC Weed Control Act, as amended."

Add "1.3.2 Immediately notify Contract Administrator of the discovery of any designated noxious weeds."

Add "1.3.3 Ensure that no equipment is working within 3 meters of the area containing designated noxious weeds."

1.4 Environmental Protection

Add "1.4.4 Maintain the site in a neat and orderly condition. Debris/garbage accumulations to be removed promptly."

Add "1.4.5 Immediately contain and clean up any leaks and spills of prohibited materials at the place of work and immediately notify the Contract Administrator accordingly."

Add "1.4.6 Ensure that no equipment fueling or servicing is conducted within 30 meters of a watercourse."

Add "1.4.7 Ensure that any fuel stored on-site is located at least 30 meters from the nearest watercourse, and is placed within a bermed and lined area in order to prevent leaks or spills in to the environment."

Add "1.4.8 If working within 10 m of any City of Langley watermains, services connections, hydrants, etc. supplying potable water the Contractor shall maintain a minimum 22 kg supply of Sodium Thio-sulphate on site at all times. Treat all spillage or breakages with appropriate neutralizing dosage (7 mg per 1000 gallons). Contact the City of Langley Operations for recommended neutralizing procedures. Notify City of Langley immediately of all watermain and service breaks."

1.9 Chlorinated Water

Add "1.9.1 Maintain Chlorinated water to be flushed to sanitary sewer or dechlorinated prior to entry to storm sewers."

Section 01 58 01 Project Identification

1.0 GENERAL

1.2 Delete

Section 03 30 20 Concrete Walks, Curbs and Gutters

1.0 GENERAL

1.4 Measurement and Payment

1.4.2 Delete

1.4.3 Replace with "Payment for machine placed or hand formed concrete curbs and gutters includes supply and placing of the concrete curbs and gutters and granular subbase and granular base and will cover all straight and curved sections."

1.4.4 Delete

3.0 EXECUTION

3.5 Concrete Placement

Add "3.5.12 Install tactile surface for visually impaired pedestrians as per Section 15.4 - Supplementary Specifications and Detailed Drawings."

Section 26 42 13 Cathodic Protection

2.0 PRODUCTS

2.1 General

Add "2.1.4 All materials are subject to approval by the Contract Administrator and are to be accessible for inspection."

Add "2.1.5 No substitutions will be permitted without approval by the Contract Administrator."

Section 26 56 01 Roadway Lighting

1.0 GENERAL

1.4 Electrical Energy Supply

Add "1.4.4 Meet requirements of utility company for service installation."

1.10 Inspection

Add "1.10.2 Voltage to be tested at service panel(s) and streetlight poles and at end of the streetlight circuit. Full Electrical load to be applied when testing voltage. No more than 3% voltage drop at end of circuit. Illumination to be tested at sufficient locations to verify requirements for minimum lighting levels and maximum uniformity ratio. Results expressed as Avg Luminance L_{avg} (cd/m_2) and Max.

Uniformity Ratio (L_{max}/L_{min}) to be reported by the Electrical Engineer to the Contract Administrator."

3.0 PRODUCTS

2.14 Luminaires

Add "2.14.4 Refer to Section 9.0 of the City of Langley Design Criteria Manual."

3.0 EXECUTION

3.6 Poles and Related Equipment

Add "3.6.11 Refer to Section 9.0 of the City of Langley Design Criteria Manual."

Add "3.14 Refer to Section 9.0 of the City of Langley Design Criteria Manual for other supplemental specifications for Streetlighting."

Section 31 11 01 Clearing and Grubbing

3.0 EXECUTION

Add "3.0.2 Prior to clearing, take photographs as required to document pre-disturbance conditions. Provide full set of prints to the Contract Administrator."

Section 31 11 41 Shrub and Tree Preservation

2.0 PRODUCTS

2.1 Materials

Add "2.1.10 Protective Fencing: As per The City of Langley Design Criteria Manual, as amended from time to time."

3.0 EXECUTION

3.1 Existing Trees

Add "3.1.7 The Contractor is responsible to for damages to all City-owned/off-site trees which are to remain."

Add "3.1.8 The Contractor will be responsible for all claims and costs including the cost of examination by an Arborist, repair, removal and replacement of trees, as required by the Arborist, the Contract Administrator and the City of Langley for tree damage where proper notification was not received from the Contractor. Damage will be assessed based on the International Society of Arboriculture Guidelines. Refer to the City of Langley Subdivision and Development Servicing Bylaw– Schedule B, as amended, for the duration of the Tree Maintenance Period."

Add "3.1.9 Place protective fencing/barricades as detailed on The City of Langley Design Criteria Manual, as amended, and maintain fence in good condition during construction."

Add "3.1.10 When work is to be performed inside fenced areas, Contractor shall take care to avoid damage to existing vegetation. Work to be done inside areas of existing vegetation to be retained includes:

1. Removal of isolated trees as directed by the Contract Administrator and the City.
2. Selective pruning and tree removal at edges to create tidy and well-shaped forest edge.
3. Placing planting soil and planting of trees."

Add "3.1.11 Do not park, service or fuel vehicles within the vegetation retention areas."

3.4 Pruning

Add 3.4.2 Do not cut roots or branches of retained trees without approval of the Contract Administrator and the City.

Section 31 23 01 Excavation, Trenching and Backfilling

3.0 EXECUTION

3.5 Backfill and Compaction

Add "3.5.5 Place and compact backfill under or adjacent to existing structures in a manner which will prevent damage to the structure from settlement. Under existing pipes, place backfill a minimum of 0.6 m horizontally on each side of pipe up to the top of the pipe and slope down at 1.5 horizontal to 1 vertical."

Section 31 24 13 Roadway Excavation, Embankment and Compaction

1.0 GENERAL

1.8 Measurement and Payment

Add "1.8.14 *Boulevard* Landscaping will be measured in square meters horizontally along the edge of the Sidewalks, curbs or pavement adjacent to the work. Payment will include:

- coordinating work with Hydro/Telus pole relocations/removals;
- landscape restoration as indicated in clause 3.8 of Section 31 24 13;
- the maintenance of all surfaces and all materials and work incidental to the Landscaping of the *Boulevard*;
- matching and re-grading all existing surfaces including driveways up to the proposed works as necessary, using same as existing material or better; and
- notifying affected property owners prior to the work."

Section 32 12 16 Hot-Mix Asphalt Concrete Paving

1.0 GENERAL

1.5 Measurement and Payment

Add "1.5.9 Payment for adjusting existing utility covers, valves, services, meter boxes, manhole covers, catch basins, and any other existing surface features to finished grade."

3.0 EXECUTION

3.4 Transportation of Mix

Add "3.4.5.1 Temperature of mix upon placement shall not be less than 125° C and not more than 160° C."

3.8 Pavement Patching

3.8.1 Replace with "Refer to City of Langley Supplemental Standard Drawing (Section R) – Permanent Utility Trench Pavement Restoration, and Pavement Cut Restoration Requirements."

Section 32 13 13 Portland Cement Concrete Paving

4.0 EXECUTION

Add ”3.16.4 Sidewalks, curbs and gutters that are to be installed between October 1st and March 31st shall apply curing and sealing compounds such as Diamond Clear 350 or City approved equivalent to the fresh concrete surface of sidewalks, curbs and gutters to:

- Protect the concrete from winter road salt damages; and
- Maintain adequate moisture in new concrete so that their strength and durability properties can develop.”

Section 32 91 21 Top Soil and Finish Grading

1.0 GENERAL

1.1 Related Work

Add ”1.1.6 Shrubs and Tree Preservation – Section 31 11 41.”

2.0 PRODUCTS

2.10.2 Replace with “Growing medium shall be screened, weed free, composted soil mixed according to Canadian Landscape Standard for the intended use and confirmed with a soil analysis report.”

3.0 EXECUTION

3.7.1 Replace with “The Contractor shall test growing medium in place by means of independent laboratory analysis to confirm conformance to the specifications. All test results shall be submitted to the Contract Administrator and the Owner’s Landscape Architect.”

Add ”3.7.2 All soil depths to be inspected by the Owner’s Landscape Architect for approval.”

Section 32 93 01 Planting of Trees, Shrubs, and Ground Covers

2.0 PRODUCTS

2.1 Plant Material

2.1.1 Replace "Species: Selection of species to be as specified" with

"Acceptable species of street trees and shrubs are listed in the City of Langley Design Criteria Manual."

Add **2.13 ROOT BARRIER**

Add "2.13.1 UB 12-2 or UB 18-2 or City approved equivalent product shall be used for root barriers."

Section 33 11 01 Waterworks

1.9 INSPECTION and TESTING

Add 1.9.1 Video Inspection

Add 1.9.1.1 "Prior to design and after construction, all storm and sanitary sewers and services located within 1.5 m of the construction location shall be CCTVed (whether existing or newly installed), regardless of length, material type and diameter, in accordance with Section 33 01 30.1. The video inspection report shall be in the form acceptable to the Contract Administrator. Successful passing is a requirement to achieve Substantial Completion."

Add 1.9.1.2 "In the event the post construction CCTV indicates apparent deficiencies, Contractor/*Applicant* shall correct the deficiencies and re-video at the Contractor's/*Applicant*'s expense."

Add 1.9.1.3 "One copy of the video in a format prescribed by the Contract Administrator complete with written report shall be submitted to the Contract Administrator. The Contract Administrator shall review the reports for quality and assess their acceptance, or non-acceptance."

2.0 PRODUCTS

2.2 Mainline Pipe, Joints, and Fittings

2.2.4.11.2 Add "Flanged couplings adapters to be EBAA 2100 Mega Flange/1000 E-Z Flange, UniFlange 200/400/420 series, StarFlange 3200/4200 series, or SuperFlange 7200 flange adapters."

2.2.4.12 Replace with "Joint restraint devices shall be stainless steel and as manufactured by EBAA

Iron, Ford Meter Box (Uin-Flange), Romac, Star or Sigma."

2.2.4.13.2.2 Replace with "Acceptable models Robar, Romac, Ford and Smith Blair. All hardware shall be stainless steel."

2.2.4.13.3.2 Replace with "Acceptable models Romac, J.C.M and Smith Blair. All hardware shall be stainless steel."

2.3 Valves and Valve Boxes

2.3.1.1	Add	"Main line valves to be size on size."
Add	"2.3.1.5	Valves shall have flanges with Class 125 standard drilling or as specified on contract documents. Valve boxes shall be Robar marked with water."
Add	"2.3.1.6	All valves to come complete with stainless steel nuts and bolts and non-rising stem."
2.3.2.1	Delete	"solid wedge or double disc valves and"
2.3.2.2	Replace	"To AWWA C500: 75 to 300 mm" with "To AWWA C500: 50 to 300 mm".
2.3.2.3	Replace	"To AWWA C509: 75 to 300 mm" with "To AWWA C509: 50 to 300 mm".
2.3.6.1.2	Replace	"Circular type" with "Robar type".
Add	"2.3.6.3	Valve riser to be inserted into 150 mm sewer cap, drilled to just allow square nut of valve stem to stick through. Cap to rest on valve body and the PVC riser pipe shall be inserted into cap thus keeping the nut free from dirt and debris as well as centered within the riser pipe. See City of Langley supplemental standard drawings."
2.3.7.1	Replace with	"Refer to the Section 3.0 of the City of Langley Design Criteria Manual."
2.3.7.2	Replace with	"Refer to the Section 3.0 of the City of Langley Design Criteria Manual."

2.5 Service Connections, Pipe, Joints and Fittings

2.5.3.2.1	Add	"Acceptable manufacturers are Robar, Romac, Smith Blair and Ford. All hardware/strapping must be stainless steel."
2.5.3.3.2	Add	"Acceptable manufacturers are Robar, Romac, Smith Blair & Ford. All hardware/strapping must be stainless steel."
2.5.3.3.2.3	Remove	"single" and replace with "double'
2.5.4	Replace with	"For all services use tapping sleeves to 2.2.4.14 of this selection. All hardware/strapping must be stainless steel."
2.5.5	Delete	

2.6 Hydrants

2.6.1.6	Add	"Pump nozzle outlet to be "Storz."

2.6.2	Replace with	"Colour: Red ".
2.6.3	Replace with	"Approved standard 150 mm diameter hydrants are Terminal City C71-P."

2.7 Underground Service Line Valves and Fittings

2.7.2.1	Add	"to be Ford, Cambridge Brass or Mueller."
2.7.2.2	Replace with	"all domestic services 19 to 50 mm to come with meter setters at the property line.
Add	"2.7.2.3	Acceptable manufactures are Mueller, Cambridge Brass and Ford."
2.7.3.1	Add	"to be Ford, Cambridge Brass or Mueller"
2.7.3.2	Delete	
Add	"2.7.3.6	Acceptable manufacturers are Mueller Cambridge Brass and Ford."

3.0 EXECUTION

3.6 Pipe Installation

3.6.6	Add	"one half" before maximum joint deflection recommended by pipe manufacturer."
3.7.2	Delete	"or pressure treated or end treated wood blocks."

3.10 Service Connection Installation

3.10.4	Replace with	"All service taps to have stainless steel double strap saddles."
3.10.5	Delete.	
3.10.11	Delete	
Add	"3.10.13	Install meter box on all services. Refer to Section 3.0 of the City of Langley Design Criteria Manual. Set box plumb and adjust top at 2 % grade from curb, when meter box is installed at the property line."
Add	"3.10.14	Mark depth of service on stake. Mark adjacent curb on alignment of service connection with letter "W" (75 mm high, 15 mm deep)."
Add	"3.10.15	The service shall be wrapped with 10 GA blue tracer wire connection from main to property line 0.5 to 1.0 m below finished grade."

3.13 Thrust Blocks

3.13.1	Replace	"Standard Detail Drawing W1" With City of Langley Supplemental Standard Drawing in this Design Criteria Manual.

Add	"3.13.7	Concrete thrust blocks to be cured for 5 days, or 2 days if high early strength concrete is used, before main can be pressurized."

3.21 Disinfection and Flushing Procedures

3.21.9	Add	"Contractor to remove Corporation stop and install brass plug under direct supervision of City of Langley Staff."
Add	"3.21.10	Consulting Engineer shall identify water sample locations on plans, take water samples and deliver to a certified lab accredited by the Ministry of Health. Result of total and fecal coliform bacteriological counts shall be submitted to the Contract Administrator prior to connection to City of Langley water supply. Bacteriological tests (2X) shall be performed as per AWWA C 651, The Design Engineer shall certify that the tests have passed and indicate which approved lab was used."
Add	"3.21.11	Refer to Section 14.0 of the City of Langley Design Criteria Manual for other requirements on water sampling."

Section 33 30 01 Sanitary Sewers

2.0 PRODUCTS

2.1 Concrete Pipe

2.1.1	Delete.	
2.1.2	Replace	"900 mm dia., strength class as shown on Contract Drawings" with "600 mm dia., Class III or better" and inside of the pipe shall be lined.

3.0 EXECUTION

3.10 Service Connection Installation

3.10.3	Replace with	"Install inspection chamber at specified location, set plumb and to specified elevation with a red lid, as shown on Standard Detail Drawing S7 and S9 or S10 and Supplemental Standard Drawings SS-G02 and SS-S08, as applicable."
3.10.5.3	Replace	"shall be capped at 1 m" with "shall be capped at less than 1 m".

3.18 Video Inspection

3.18.1	Replace with	"Prior to design and after construction, all storm and sanitary sewers and services located within 1.5 m of the construction location shall be CCTVed

(whether existing or newly installed), regardless of length, material type and diameter, in accordance with Section 33 01 30.1. The video inspection report shall be in the form acceptable to the Contract Administrator. Successful passing is a requirement to achieve Substantial Completion."

3.18.2 Replace with "In the event the post construction CCTV indicates apparent deficiencies, Contractor/*Applicant* shall correct the deficiencies and re-video at the Contractor's/*Applicant*'s expense."

Add "3.18.3 One copy of the video in a format prescribed by the Contract Administrator complete with written report shall be submitted to the Contract Administrator. The Contract Administrator shall review the reports for quality and assess their acceptance, or non-acceptance."

3.19 Installation Standard

3.19.5.2 Replace with "Mainline sewers and service connections, regardless of pipe material:

- 100 mm to 250 mm diameter, inclusive: 10 mm maximum ponding over a 3-meter length of pipeline.
- 300 mm diameter and larger: 15 mm maximum ponding over a 3-meter length of pipeline."

3.19.5.3 Replace with "Concrete pipe shall not have cracks exceeding ASTM specifications."

3.20 Connections to Existing Mains

3.20.1 Replace with "When permitted by the Contract Administrator, Connections to existing *Sanitary Sewer Systems* to be performed by the Contractor and supervised by City of Langley forces at the *Applicant*'s expense. Contractor shall notify City of Langley Operations a minimum of 48 hours in advance of required tie-in or connection."

Section 33 34 01 Sewage Force Mains

2.0 PRODUCTS

2.2 Pipe, Joints and Fittings

2.2.5.8.1 Replace with "Bolts, nuts and washers shall be stainless steel."

2.2.5.8.2 Delete."

2.3 Valves and Valve Boxes

2.3.1.1	Add	"Main line valves to be size on size."
Add	"2.3.1.3	All Valves to have flanges with Class 125."
2.3.2.1	Delete	"solid wedge and".
2.3.2.2	Delete.	
Add	"2.3.2.7	All valves to come complete with stainless steel nuts and bolts and non-rising stem."
2.3.5.2	Add	"All valve boxes must be Robar marked Sewer."
Add	"2.3.5.3	Valve riser to be inserted into 150 mm sewer cap, drilled to just allow square nut of valve stem to stick through. Cap to rest on valve body and the PVC riser pipe shall be inserted into cap thus keeping the nut free from dirt and debris as well as centered within the riser pipe. See City of Langley supplemental standard drawings in this Design Criteria Manual."

2.4 Valve Chambers

2.4.8	Add	"Valve chambers shall have steel lids that lock open."

3.16 Connections to Existing Mains

3.16.1	Replace with	"When permitted by the Contract Administrator, Connections to existing Sanitary Sewer Systems shall be performed by the Contractor and supervised by City of Langley forces at the *Applicant*'s expense."

Section 33 40 01 Storm Sewers

2.0 PRODUCTS

2.1 Concrete Pipe

2.1.2	Replace	"900 mm diameter strength class as shown on Contract Drawings" with "600 mm diameter Class III or better."

2.5 Spiral Rib Pipe-Steel

Delete 2.5.1 through 2.5.6

2.6 Service Connections

2.6.1 Replace “100” with “150”

2.6.2 Delete “100 mm and”

2.6.3 Delete “100 mm and”

2.6.8 Delete

3.0 EXECUTION

3.10 Service Connection Installation

3.10.3 Replace with “Install inspection chamber at specified location, set plumb and to specified elevation with a green lid as shown on Standard Detail Drawing S7 and S9 or S10 and Supplemental Standard Drawings SS-G02, SS-SL05, and SS-D16, as applicable.”

3.11 Cleaning and Flushing

3.11.3 Add “Prior to discharge to storm sewer or open channel, all potable water shall be neutralized using Sodium Thiosulphate in the appropriate manner and recommended dosage. Refer to Section 14.0 of the City of Langley Design Criteria Manual for other requirements on discharging to storm sewers or open channels.”

3.12 Inspection and Testing

3.12.1 Replace with “Prior to design and after construction, all storm and sanitary sewers and services located within 1.5 m of the construction location shall be CCTVed (whether existing or newly installed), regardless of length, material type and diameter, in accordance with Section 33 01 30.1. The video inspection report shall be in the form acceptable to the Contract Administrator. Successful passing is a requirement to achieve Substantial Completion.”

3.12.2 Replace with “In the event the CCTV indicates apparent deficiencies, Contractor shall correct the deficiencies and re-video at the Contractor’s expense”.

Add “3.12.4 One copy of the video in a format prescribed by the Contract Administrator complete with written report shall be submitted to the Contract Administrator. The Contract Administrator shall review the reports for quality and assess their acceptance, or non-acceptance.”

3.13 Installation Standard

Add “3.13.6 Concrete pipe shall not have cracks exceeding ASTM specifications.”

3.14 Connections to Existing Mains

3.14.1	Replace with	"When permitted by the Contract Administrator, all connections to existing mains shall be performed by the Contractor under the supervision of the City of Langley at the *Applicant*'s expense and shall be cored. The *Applicant*'s Contractor may excavate and prepare the site and shall give minimum 48 hours' notice to the City of Langley prior to connection."

Section 33 42 13 Pipe Culverts

2.0 PRODUCTS

Delete	2.1	"Corrugated Steel Pipe"
Delete	3.3	"Laying Corrugated Steel Pipe Culverts"
Delete	3.4	"Joints: Corrugated Steel Culverts"

Section 33 44 01 Manholes and Catch Basins

2.0 PRODUCTS

2.1 Materials

2.1.7.3	Replace with	"Riser rings are not permitted."
2.1.22	Delete	
Add	"2.1.23	Where street trees are incorporated in designs, all manholes, catch basins, and inspection chambers within 1.5 m of a tree root ball shall be protected using a "root barrier" product between the appurtenance and the tree side face."

3.0 EXECUTION

3.7 Endwall Installation

3.7.1 Delete.

3.9 Adjusting Tops of Existing Units

Add	"3.9.6	Cast Iron rising rings are not permitted."

Section 34 41 13 Traffic Signals

2.0 PRODUCTS

2.15 Traffic and Pedestrian Signals

2.15.2	Delete	"or green" and add "Yellow reflective tape required around the front edge of all backboards.
Add	"2.15.3	"Pedestrian signal heads to be LED countdown heads."
Add	"2.15.4	All signal heads to be 300 mm diameter LED fixtures."

3.0 EXECUTION

Add	"3.26	Refer to Section 10.0 of the City of Langley Design Criteria Manual for other supplemental specifications for Traffic Signals.

Supplementary Specifications Standards and Detail Drawings

15.4 Index of Supplemental Standard Drawings

The following numbered and listed supplemental standard (SS) drawings are attached to and form part of these Supplemental Specifications. These drawings take precedence over the Standard Detail Drawings in the Master Municipal Specification, as amended.

All references to these standard detail drawings shall in each instance be understood to refer to the latest dated revision as issued by the City of Langley.

CONCRETE DETAILS (C)

SS-C01	Typical Single Curb Ramp w/ Planting Strip (Replaces MMCD-C8/C9)
SS-C01A	Typical Double Curb Ramp w/ Planting Strip (Replaces MMCD-C8/C9)
SS-C01B	Typical Combined Curb Ramp w/ Planting Strip (Replaces MMCD-C8/C9)
SS-C02	Typical Sidewalk Widening Around Obstructions
SS-C03	Concrete Sidewalk and Barrier Curb (Replaces MMCD-C1/C2)
SS-C03A	Asphalt Multi Use Path (MUP) and Barrier Curb
SS-C04	Asphalt Swale
SS-C05	Road End Barricades

STORM SEWER DETAILS (D)

SS-D01	Rainfall Intensity Duration Frequency (IDF Table)
SS-D02	Rainfall Intensity Duration Frequency (IDF Curve)
SS-D03	Storm Sewer Design Table
SS-D04	Storm Sewer Manhole Cover & Frame
SS-D05	Flow Control Manhole
SS-D06	Typical Detention Chamber Ladder Detail at Extraction Manhole
SS-D07	Flow Control Structure Orifice Protection Basket
SS-D08	Typical Driveway Culvert with Concrete End Walls (Replaces MMCD-S15)
SS-D09	Ditch Catch Basin Type I
SS-D10	Typical Catch Basin with Swale Construction
SS-D11	Catch Basin Type II
SS-D12	Standard Top Inlet 600 mm x 1200 mm Catch Basin (Replaces MMCD-S11)
SS-D13	Standard 600 mm x 1000 mm (Nominal) Catch basin - Parking Lot Application
SS-D14	Typical Catch Basin Construction (Where Shallow C.B. is Required) (Replaces MMCD-S11)
SS-D15	Side Inlet Catch Basin Frame
SS-D16	200Ø Inspection Chamber & Clean Out LID and Frame
SS-D17	Typical Rainwater Management System – Single Family Residential
SS-D18	Storage Manhole for Single Family Residential Dwellings

ELECTRICAL DETAILS (E)

SS-E01	Detector Loop Dimensions Typical
SS-E02	Pedestrian Button Location Single Pole Per Corner Typical
SS-E03	Public Realm for Black Colour Theme Poles and Street Furniture
SS-E04	Tree Planting – Electric Junction Box

GENERAL DETAILS (G)

SS-G01	Sample Service Record Card
SS-G02	Typical Location of City Service Connections
SS-G03	Common Trench Installation
SS-G04	Temporary Lot Siltation Control
SS-G05	Temporary Construction Access
SS-G06	Temporary Access Pad (Single Family Residential)
SS-G07	Broken Rock Riprap Specifications

ROADWORKS DETAILS (R)

SS-R01	Arterial Road – Divided (with Multi-Use Path)
SS-R01A	Arterial Road – Divided (with Buffered Bike Lanes)
SS-R01B	Arterial Road – Divided (with Raised Bike Lanes)
SS-R02	Arterial Road – Undivided (with Multi-Use Path)
SS-R02A	Arterial Road – Undivided (with Buffered Bike Lanes)
SS-R02B	Arterial Road – Undivided (with Raised Bike Lanes)
SS-R03	Collector Road – Divided (with Multi-Use Path)
SS-R03A	Collector Road – Divided (with Buffered Bike Lanes)
SS-R04	Collector – Undivided (with Multi-Use Path)
SS-R04A	Collector – Undivided (with Buffered Bike Lanes)
SS-R05	Collector Road – Undivided (Two Way Bike Lane)
SS-R06	Collector Road – Undivided (Shared Bike Lanes)
SS-R07	Local Residential Road
SS-R07A	Typical Initial ½ Road Section - Local Residential Road
SS-R07B	Typical Remaining ½ Road Section - Local Residential Road
SS-R08	Local Residential Road (Non-bus Routes)
SS-R08A	Typical Initial ½ Road Section - Local Residential Road (Non-bus Routes)
SS-R08B	Typical Remaining ½ Road Section - Local Residential Road (Non-bus Routes)
SS-R09	Local Residential - Typical Plan View w/ Traffic Calming
SS-R10	Local Residential Road
SS-R11	Local Residential Road – Plan View
SS-R12	Local Residential Road (Non-bus Routes)
SS-R12A	Typical Initial ½ Road Section, Local Residential Road (Non-bus Routes)
SS-R12B	Typical Remaining ½ Road Section - Local Residential Road (Non-bus Routes)
SS-R13	Existing Urban Residential Access Lane (Centerline Drainage)
SS-R14	Existing Urban Residential Access Lane (One Way Cross Fall)
SS-R15	Access Lane (Centerline Crown)
SS-R16	Industrial
SS-R17	Typical Bioswale (Sample Only)
SS-R18	Typical Urban Cul-De-Sac Sidewalk with Landscaped Blvd.
SS-R19	Typical Urban Cul-De-Sac Offset Type Sidewalk with Landscaped Blvd.
SS-R20	Typical Temporary Hammerhead Turn Around Residential
SS-R21	Typical Trail Cross Section
SS-R22	Utility Trench Pavement Restoration (Replaces MMCD-G5)
SS-R23	Pavement Cut Restoration Requirements
SS-R23A	Pavement Cut Restoration Requirements
SS-R23B	Pavement Cut Restoration Requirements
SS-R24	Driveways, Multi-Family/Commercial/Industrial Letdown (Replaces MMCD-C7)
SS-R25	Raised Median Left Turn Bay
SS-R26	Raised Median End Treatment
SS-R27	Raised Median Bull Nose End Barrier Curb Treatment
SS-R28	Bike Racks
SS-R29	Pathways, Multi-use Section Details

SANITARY SEWER DETAILS (S)

SS-S01	Sanitary Sewer Design Table
SS-S02	Sanitary Sewer Manhole Cover & Frame
SS-S03	Typical Air Valve or Air Vacuum Installation on Sanitary Forcemains
SS-S04	Typical Gate Valve Installation for Sanitary Forcemains
SS-S05	Robar Valve Box and Lid for Sanitary Forcemain Valves

SS-S06 Inside Drop Manhole (Replaces MMCD-S4)
SS-S07 Sanitary Blow Down Assembly
SS-S08 200Ø Inspection Chamber & Clean Out LID and Frame
SS-S09 Typical Sanitary Pump Station
SS-S10 Pumping Port to Sanitary Forcemain
SS-S11 Proposed Sanitary Pump Station Water Service Cabinet

TREE PLANTING DETAILS (SS-TP)

SS-TP01 Tree Planting Layout with Structural Soil - Soft and Hard Surface Blvds.
SS-TP02 Tree Planting with Structural Soil - Soft Surface Blvds.
SS-TP02A Tree Planting with Soil Cell System - Soft Surface Blvds.
SS-TP03 Tree Planting with Structural Soil – Tree Grates in Hard Surface Blvds.
SS-TP03A Tree Planting with Soil Cell System – Tree Grates in Hard Surface Blvds.
SS-TP04 Tree Protection Detail
SS-TP05 Street Tree Setback/Clearances
SS-TP06 Tree Grate Frame Support
SS-TP07 Typical Planted Median Installation
SS-TP08 Soil Type Analysis Sheet

WATERWORKS DETAILS (W)

SS-W01 Typical Water Service (19 mm – 50 mm) with Meter Box & Setter (Replaces MMCD-W2A/2B)
SS-W02 Typical Hydrant Assembly (Replaces MMCD-W4)
SS-W03 Typical Gate Valve Installation for Watermain (Replaces MMCD-W3)
SS-W04 100 mm Water Blow-Off on All Watermain End Points (Replaces MMCD-W8)
SS-W05 Typical sizing of Concrete Thrust Blocks (Replaces MMCD-W1)
SS-W06 Typical Open Area Hydrant Protection and Steel Bollard Filled with Concrete
SS-W07 Typical Service Installation
SS-W08 Meter Installation 50 mm Ø and Under (Replaces MMCD-W2C/2D)
SS-W09 Meter Installation 50-75 mm Ø Compound
SS-W10 Meter Installation 100-150 mm Ø Compound
SS-W11 100-250 mm Ø Dedicated Fire Line Only with Detector Meter
SS-W12 Meter Installation, 150 mm Ø Fire/Domestic Meter
SS-W13 Mechanical Room General Schematic

SOUTH LANGLEY DETAILS (SL)

SS-SL01 South Langley Design Criteria Area
SS-SL02 Typical Infiltration Gallery System (Graded to Front) – Single Family Residential
SS-SL03 Typical Infiltration Gallery System (Graded to Back) – Single Family Residential
SS-SL04 Infiltration Gallery and Sedimentation Manhole
SS-SL05 Infiltration Gallery Overflow Access Manhole
SS-SL06 Bioswale
SS-SL07 15.0 m R.O.W. Road - South Langley with Bioswale Type A
SS-SL08 16.5 m R.O.W. Road - South Langley with Bioswale Type B
SS-SL09 20.0 m R.O.W. Road - South Langley with Bioswale Type C
SS-SL10 15.0-16.0 m R.O.W. Road - South Langley with Bioswale Type D
SS-SL11 Onsite Infiltration Design Template

NOTE - DROPS REQUIRED ON ALL BARRIER CURBS EVEN WHERE NO SIDEWALK CURRENTLY EXISTS.

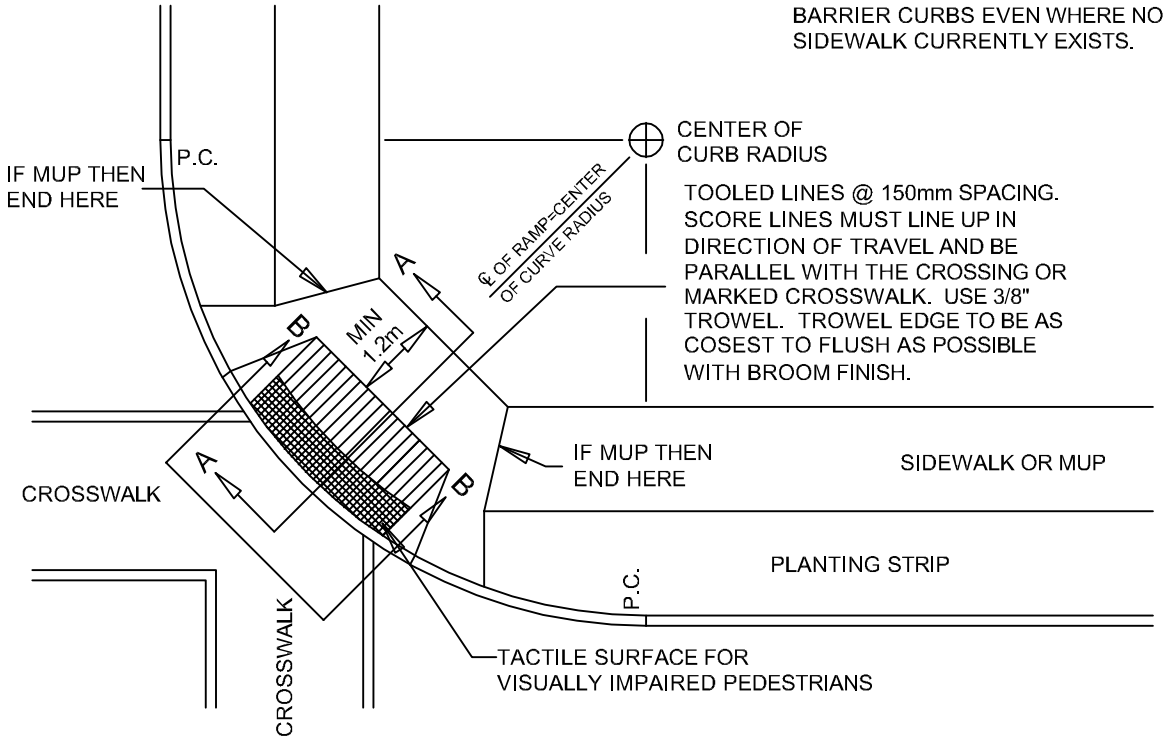

RAMP INSTALLATION @ CORNER (TYPICAL)

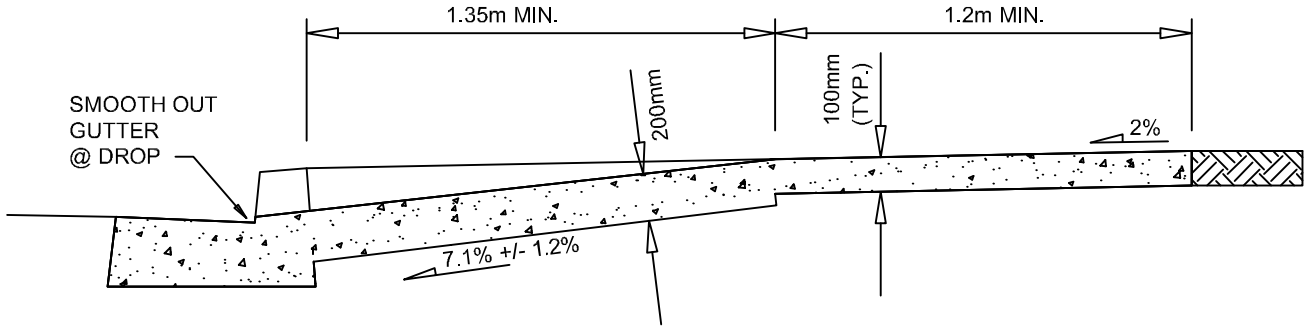

SIDE VIEW SECTION (TYPICAL)
Section A-A

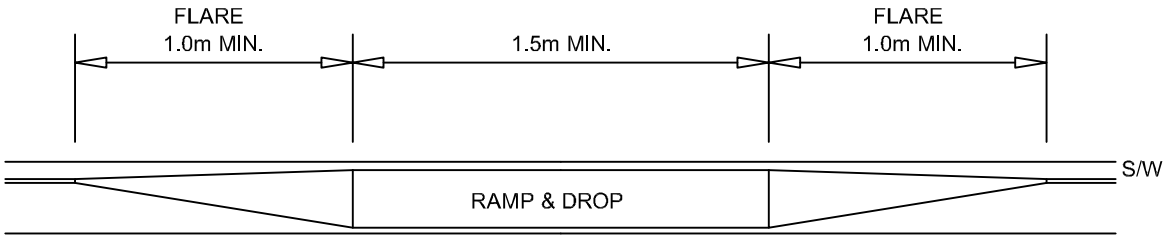

FRONT VIEW from ROAD (TYPICAL)
Section B-B

TYPICAL SINGLE CURB RAMP w/ PLANTING STRIP (REPLACES MMCD-C8/C9)	Langley City THE PLACE TO BE	DRAWN Dec 2019
		REVISED
		SCALE N.T.S.
		SS-C01

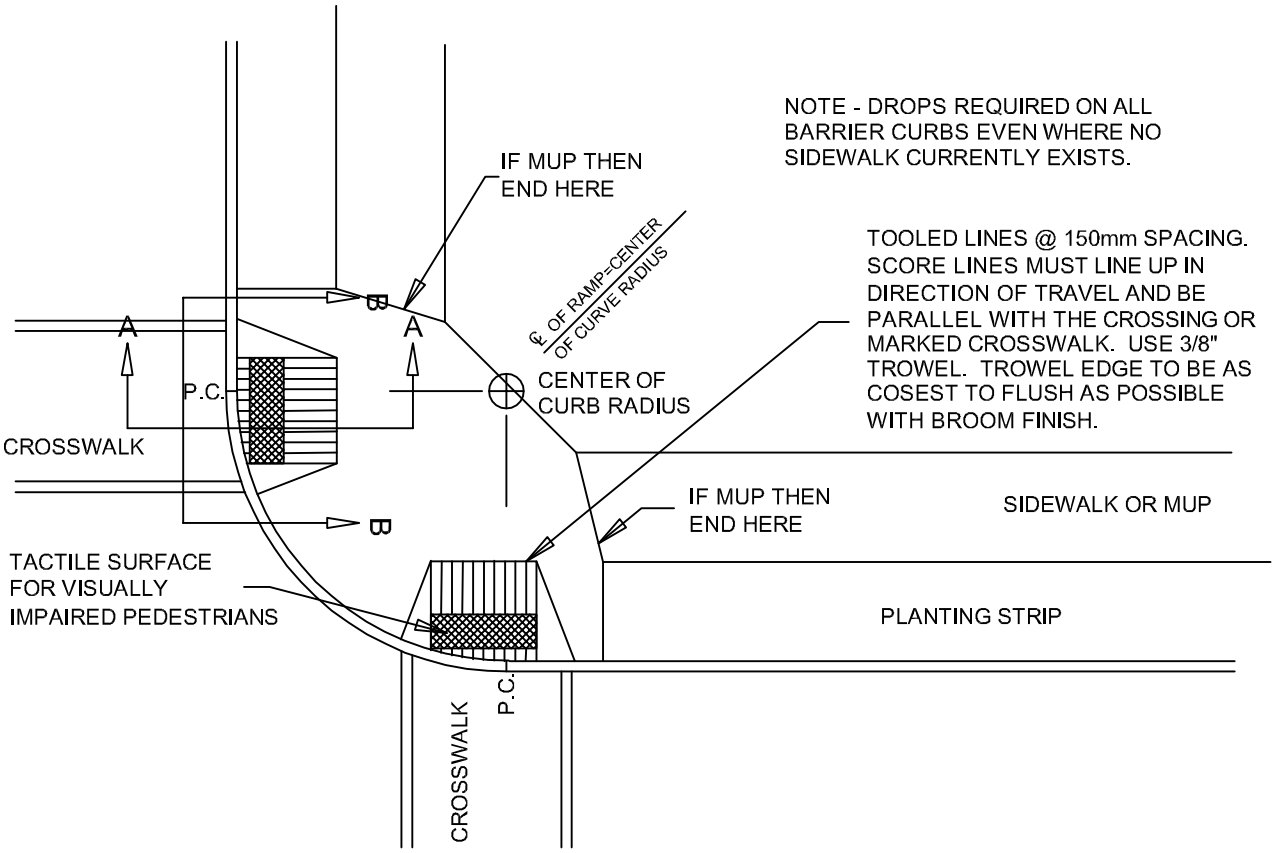

RAMP INSTALLATION @ CORNER (TYPICAL)

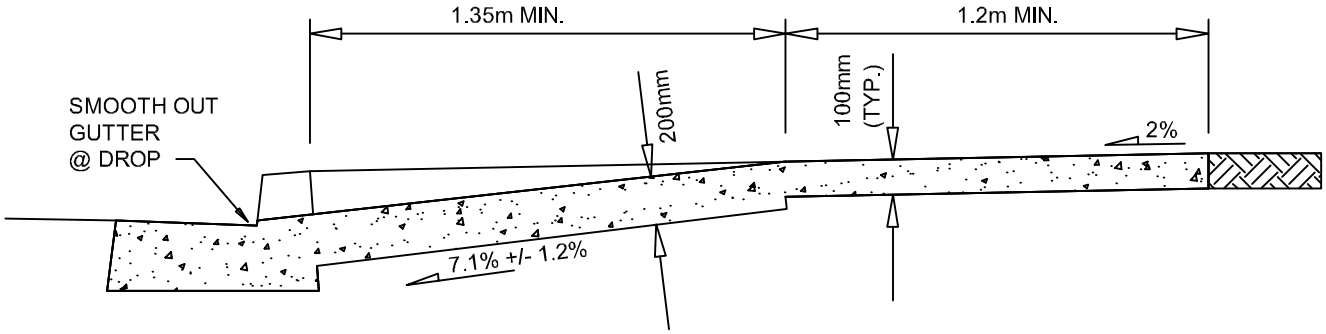

SIDE VIEW SECTION (TYPICAL)
Section A-A

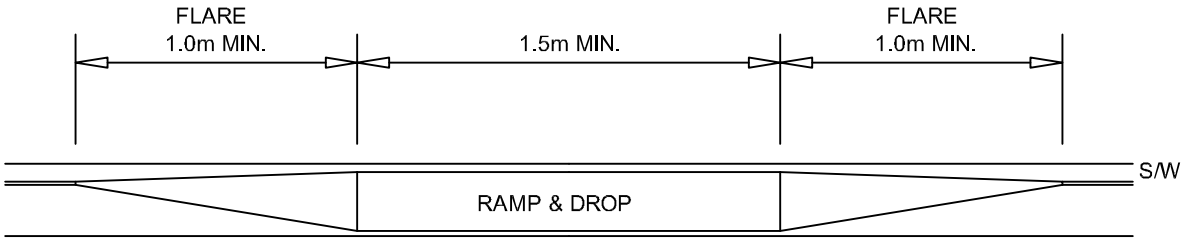

FRONT VIEW from ROAD (TYPICAL)
Section B-B

TYPICAL DOUBLE CURB RAMP w/ PLANTING STRIP (REPLACES MMCD-C8/C9)

Langley City
THE PLACE TO BE

DRAWN	Dec 2019
REVISED	
SCALE	N.T.S.
	SS-C01A

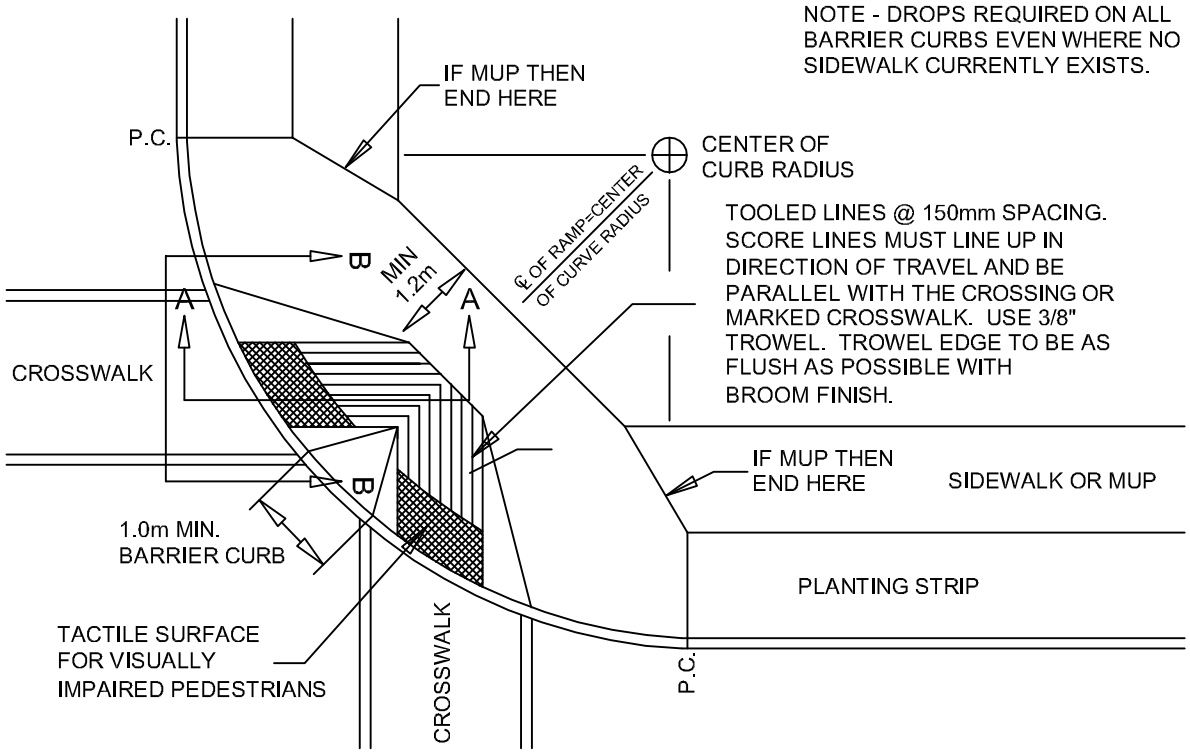

RAMP INSTALLATION @ CORNER (TYPICAL)

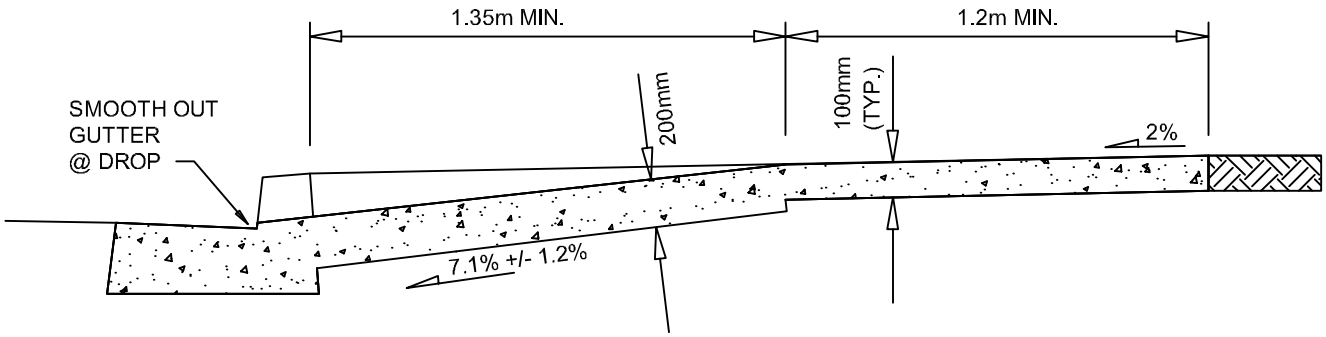

SIDE VIEW SECTION (TYPICAL)
Section A-A

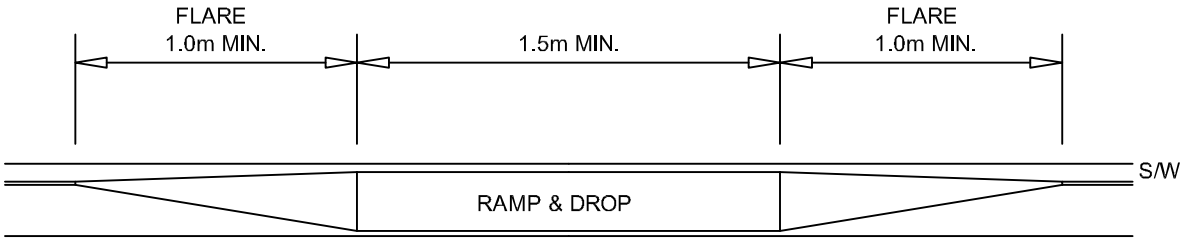

FRONT VIEW from ROAD (TYPICAL)
Section B-B

TYPICAL COMBINED CURB RAMP w/ PLANTING STRIP (REPLACES MMCD-C8/C9)

Langley City
THE PLACE TO BE

DRAWN	Dec 2019
REVISED	
SCALE	N.T.S.
	SS-C01B

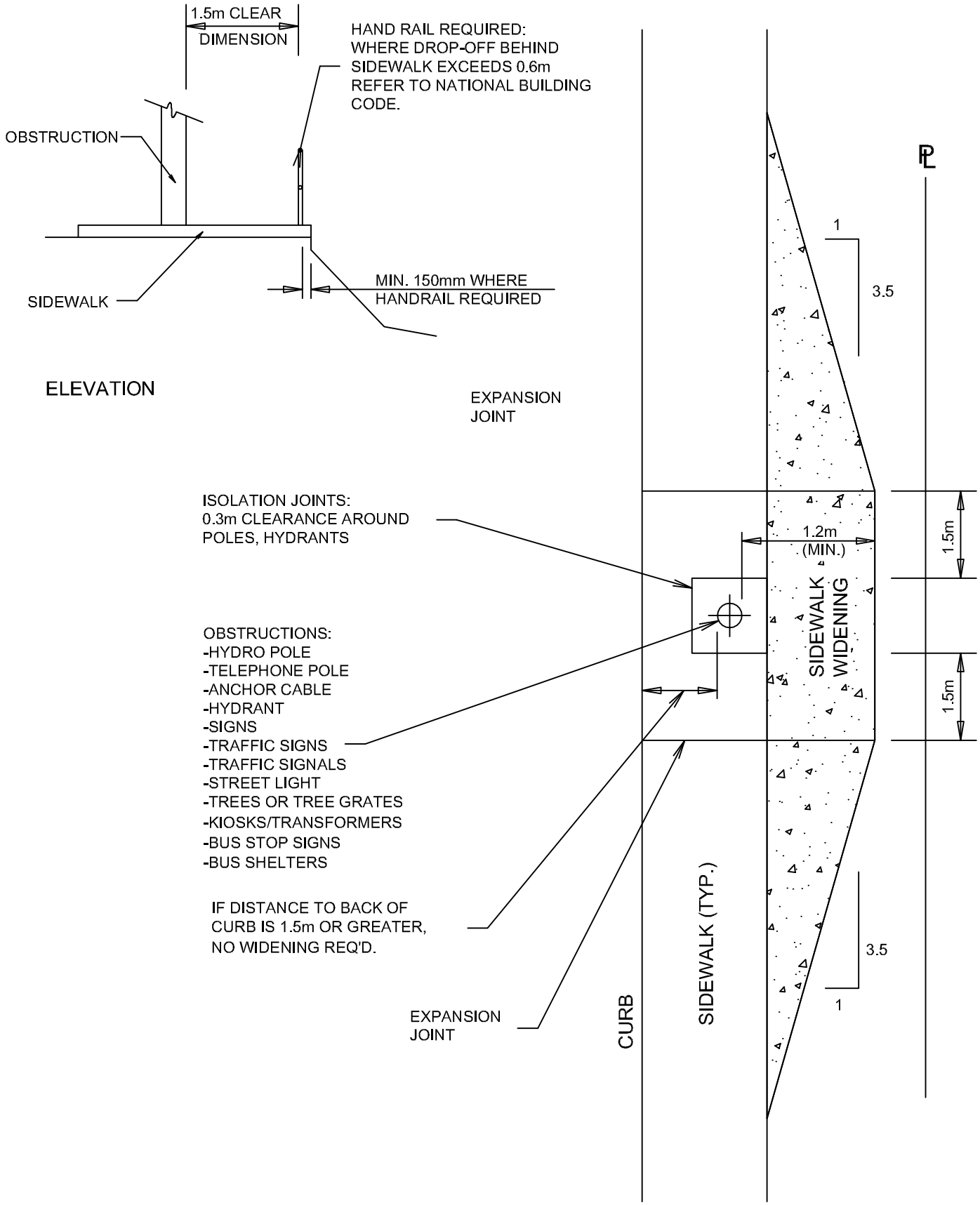

TYPICAL SIDEWALK WIDENING AROUND OBSTRUCTIONS

Langley City
THE PLACE TO BE

DRAWN	Dec 2019
REVISED	
SCALE	N.T.S.
	SS-C02

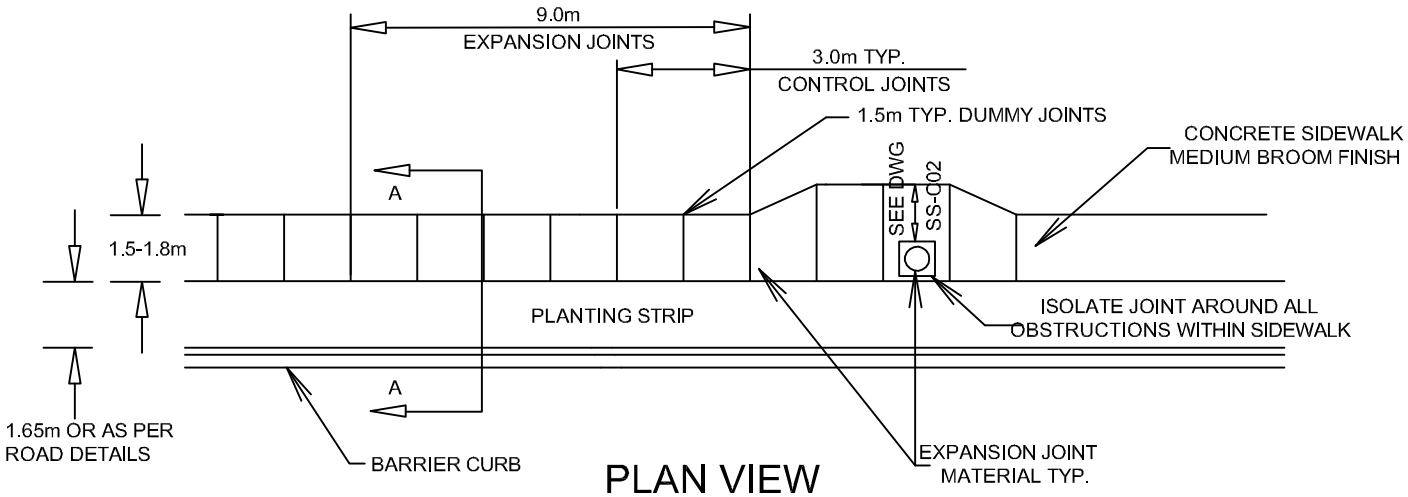

PLAN VIEW

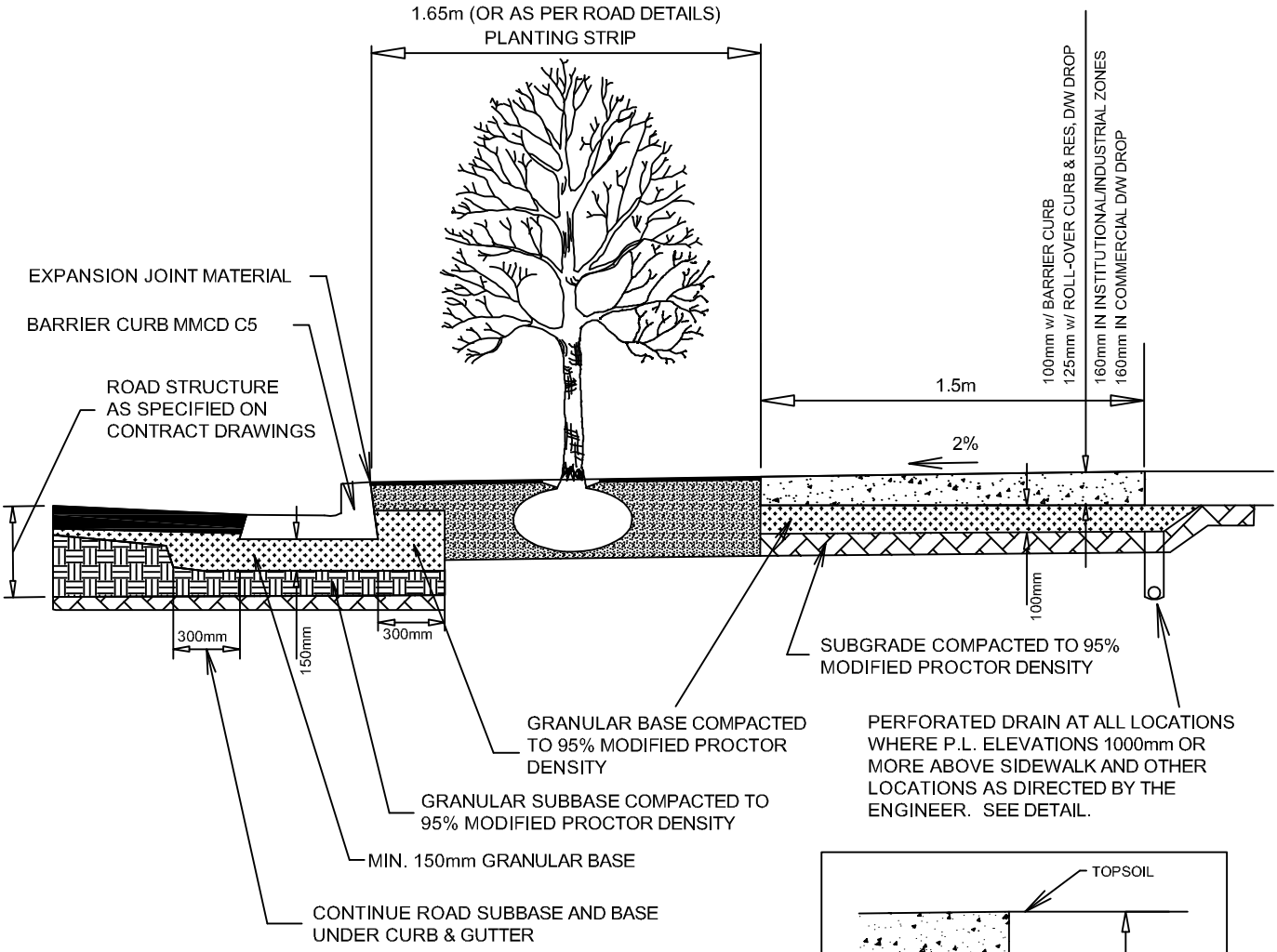

SECTION A-A

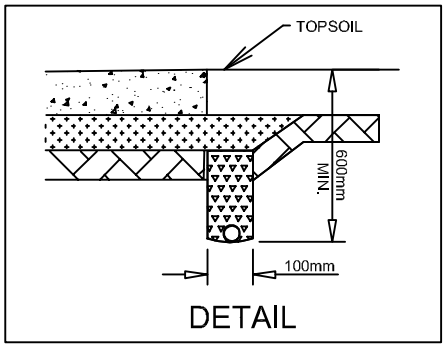

DETAIL

CONCRETE SIDEWALK AND BARRIER CURB (REPLACES MMCD-C1/C2)	Langley City THE PLACE TO BE	DRAWN Dec 2019
		REVISED
		SCALE N.T.S.
		SS-C03

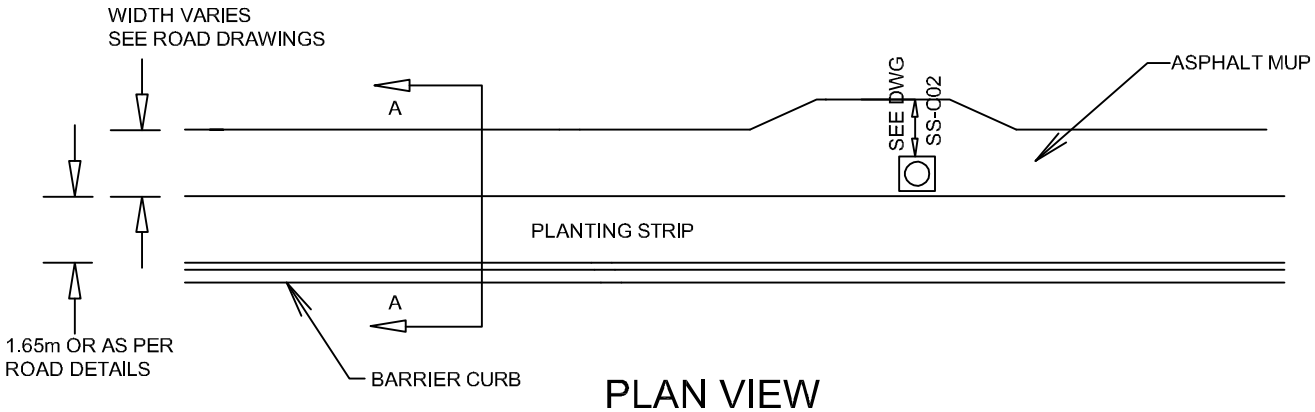

PLAN VIEW

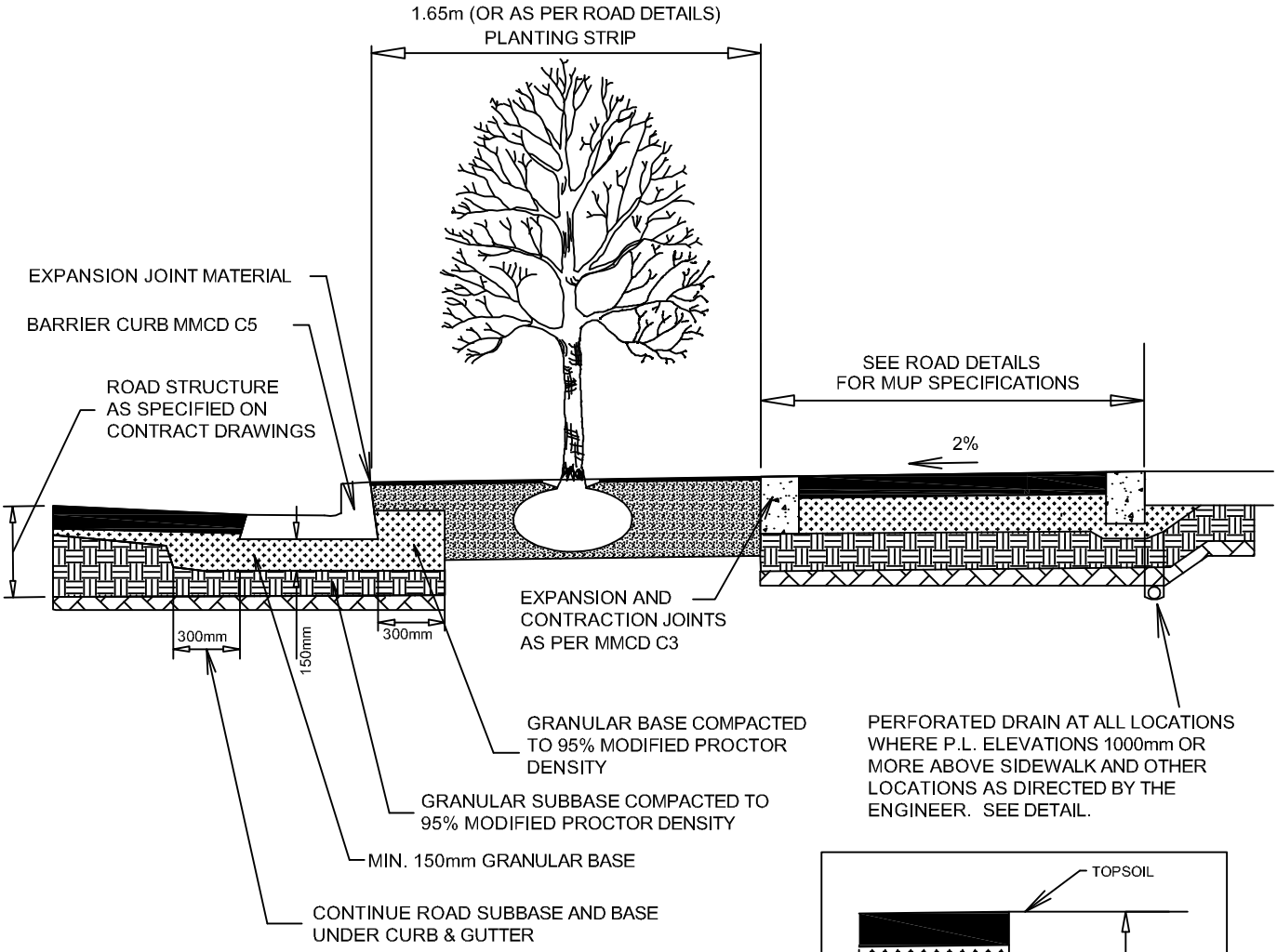

SECTION A-A

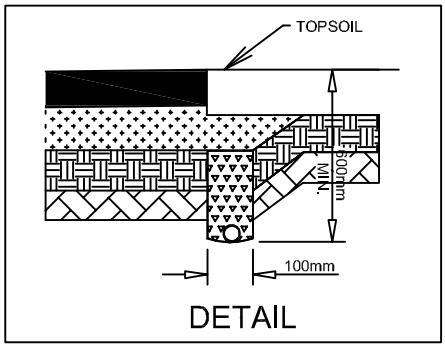

DETAIL

ASPHALT MULTI USE PATH (MUP) AND BARRIER CURB

Langley City
THE PLACE TO BE

DRAWN	Dec 2019
REVISED	
SCALE	N.T.S.
	SS-C03A

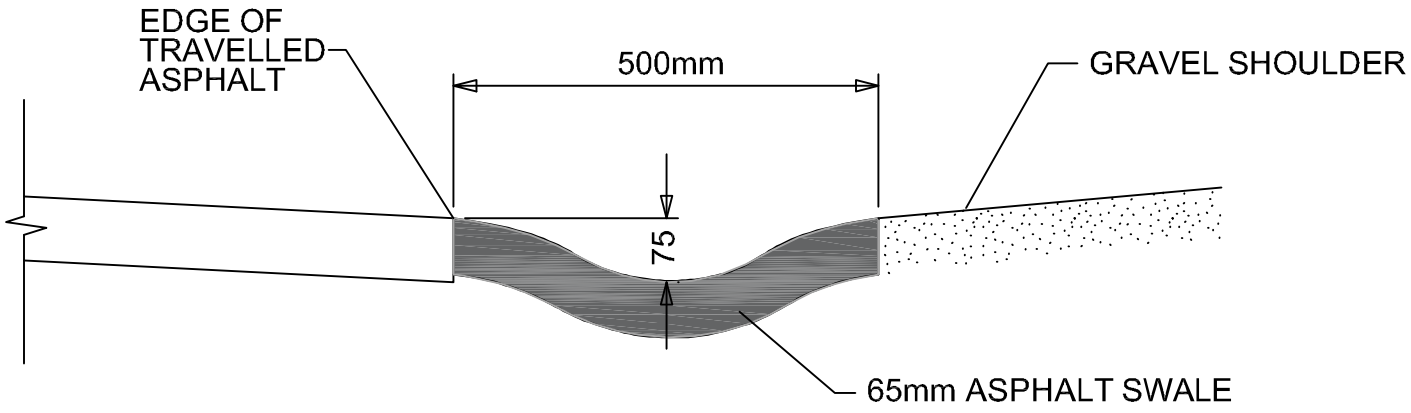

ASPHALT SWALE

ASPHALT SWALE	Langley City THE PLACE TO BE	DRAWN Dec 2019
		REVISED
		SCALE N.T.S.
		SS-C04

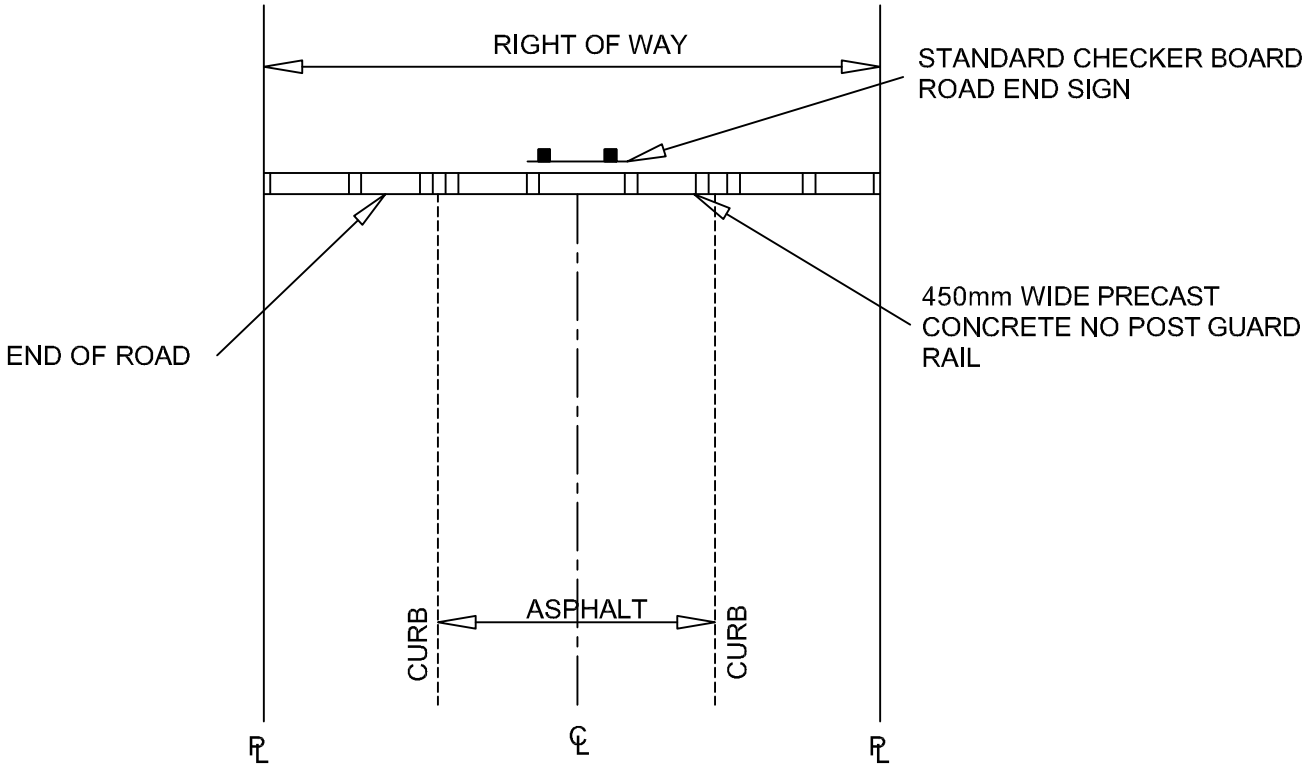

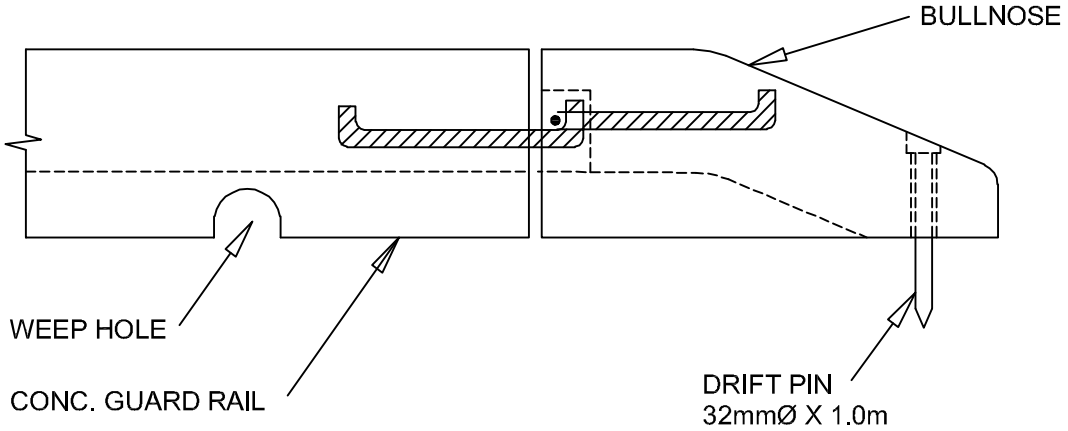

NOTES:

1. GUARD RAIL TO BE IN INTERLOCKING SECTIONS. END SECTION TO BE A BULLNOSE WITH A 1.0m LONG X 32mmØ DRIFT PIN.

2. CONCRETE TO BE PAINTED WITH STANDARD YELLOW TRAFFIC MARKING PAINT.

3. GUARD RAIL TO EXTEND ACROSS FULL WIDTH OF ASPHALT WHERE GROUND DROPS OFF 1.0m OR MORE AT THE END OF ASPHALT, EXTEND GUARD RAIL ACROSS THE FULL RIGHT OF WAY.

4. COMMENCE INSTALLATION WITH HOOK ON LEADING END. PLACE BULLNOSE SECTION FIRST. END OF CURB LINE IS A BULLNOSE SECTION WITH AN EYE CONNECTOR.

ROAD END BARRICADES	Langley City THE PLACE TO BE	DRAWN Dec 2019
		REVISED
		SCALE N.T.S.
		SS-C05

Rainfall IDF Data - Kwantlen Park

Add 20% to each reading to reflect climate change effects

Rain Depth (mm)

TR (Yr)	Duration (Hour)								
	0.083333 (5 min)	0.166667 (10 min)	0.25 (15 min)	0.5 (30 min)	1	2	6	12	24
2	3.7	5.3	6.4	8.5	11.8	17.3	33.5	49.5	66.9
5	5.7	7.9	9.1	11.7	15.0	21.2	40.3	61.6	86.1
10	7.0	9.6	10.9	13.8	17.2	23.8	44.9	69.6	98.8
25	8.6	11.8	13.2	16.5	19.9	27.1	50.6	79.7	114.8
50	9.8	13.4	14.9	18.6	21.9	29.5	54.9	82.2	126.6
100	11.0	14.9	16.6	20.5	23.9	31.9	59.1	94.7	138.5

Rain Intensity (mm/hr)

TR (yr)	Duration (Hour)								
	0.083333 (5 min)	0.166667 (10 min)	0.25 (15 min)	0.5 (30 min)	1	2	6	12	24
2	44.4	31.8	25.6	17.0	11.8	8.7	5.6	4.1	2.8
5	68.4	47.4	36.4	23.4	15.0	10.6	6.7	5.1	3.6
10	84.0	57.6	43.6	27.6	17.2	11.9	7.5	5.8	4.1
25	103.2	70.8	52.8	33.0	19.9	13.6	8.4	6.6	4.8
50	117.6	80.4	59.6	37.2	21.9	14.8	9.2	6.9	5.3
100	132.0	89.4	66.4	41.0	23.9	16.0	9.9	7.9	5.8

Interpolation Equations of IDF Curve: I=A*T^B

I= Rainfall Intensity (mm/hr) T= Rainfall Duration (hours)

Rain Recurrence Interval	A	B
2-Yr	12.852	-0.482
5-Yr	17.286	-0.52
10-Yr	20.186	-0.535
25-Yr	23.818	-0.55
50-Yr	26.499	-0.558
100-Yr	29.158	-0.564

RAINFALL INTENSITY DURATION FREQUENCY

Langley City THE PLACE TO BE

DRAWN	Dec 2019
REVISED	
SCALE	N.T.S.
	SS-D01

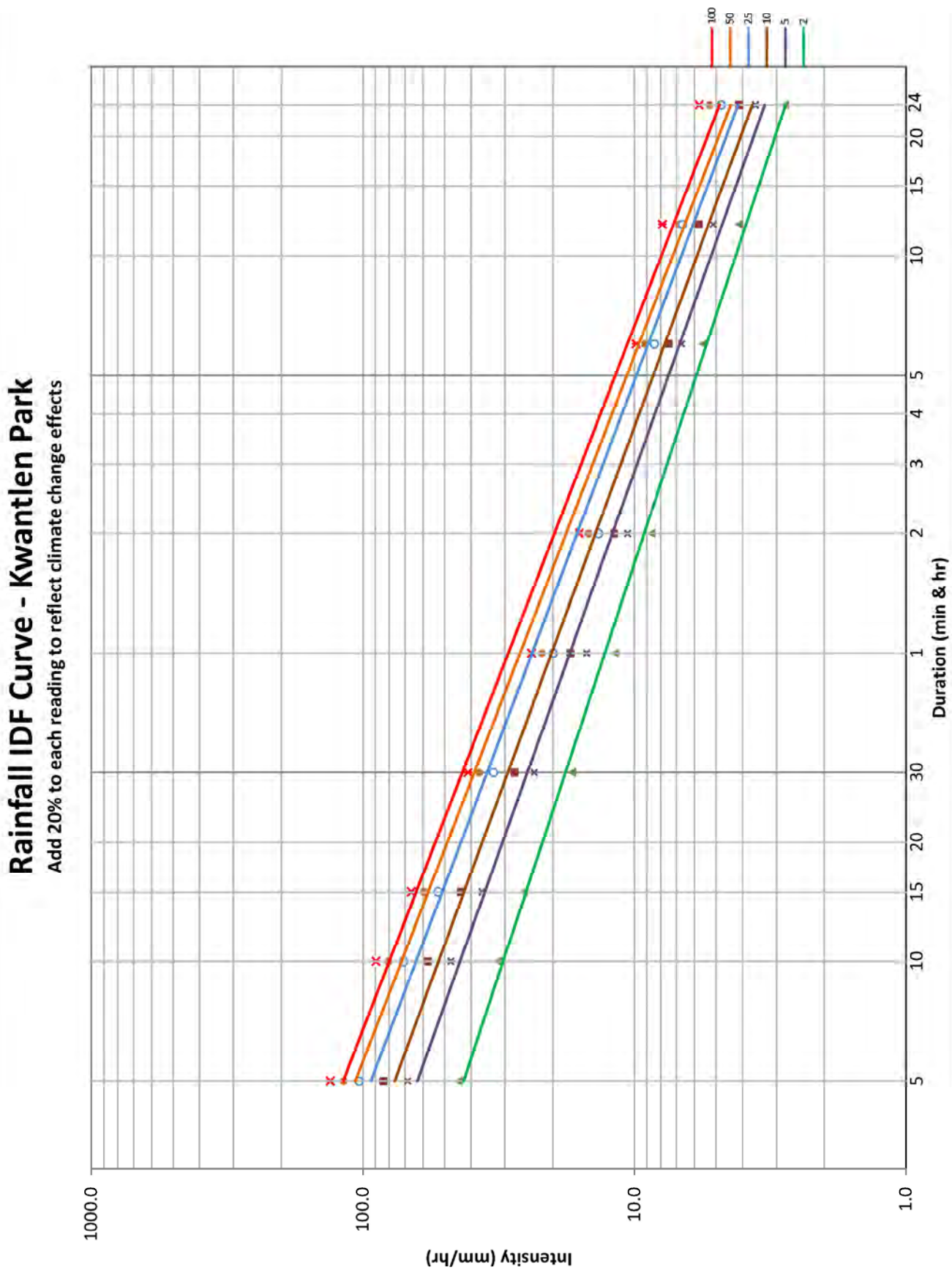

RAINFALL INTENSITY DURATION FREQUENCY (IDF TABLE)

Langley City
THE PLACE TO BE

DRAWN	Dec 2019
REVISED	
SCALE	N.T.S.
	SS-D02

STORM SEWER DESIGN TABLE

Langley City
THE PLACE TO BE
langleycity.ca

Project: _____ Designed By: _____ Sheet ____ of _____

Storm Return Period: _____ Checked By: _____ City File No.: _____

Date: _____

STORM SEWER LOCATION			CATCHMENT DATA										PIPE DESIGN DATA									HGL			COMMENTS
Sub-catchment Name (In refrence to the submitted drawings)	From MH#	To MH#	Area Incr. (ha)	Area Total (ha)	Runoff Coeff. R	Time of Concentration Ti (min)	Tt (min)	Tc (min)	Rain Intensity I (mm/hr)	Q=RAIN (m³/s)	Controlled Flow from U/S (m³/s)	Total Flow (m³/s)	Mann. Coef. n	Slope S (%)	Req. Diam. d (mm)	Design Pipe Size D (mm)	Pipe Design Criteria d/D	Hyd. Radius R (m)	Design Cap. Q_{CAP} (m³/s)	Flow Vel. using "Total Flow" through Design Pipe size D (m/s)	Pipe length L (m)	HGL SLOPE (%)	U/S End Elev. (m)	D/S End Elev. (m)	

STORM SEWER DESIGN TABLE

Langley City
THE PLACE TO BE

DRAWN Dec 2019
REVISED
SCALE N.T.S.

SS-D03

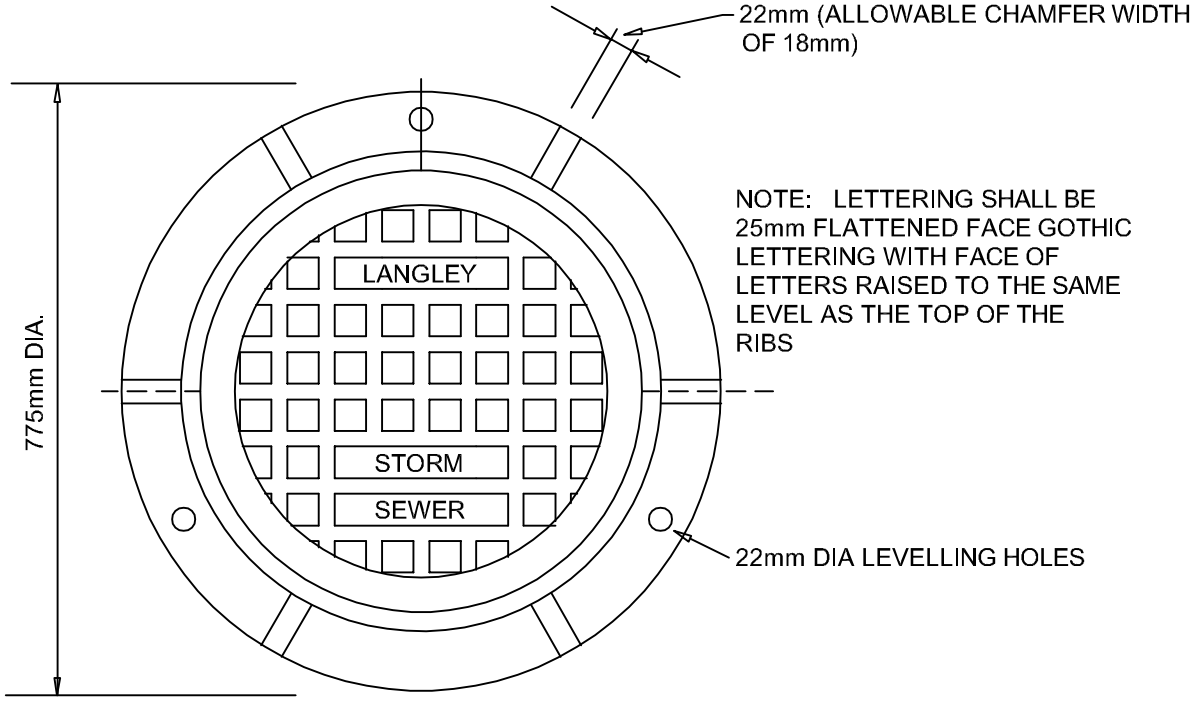

PLAN

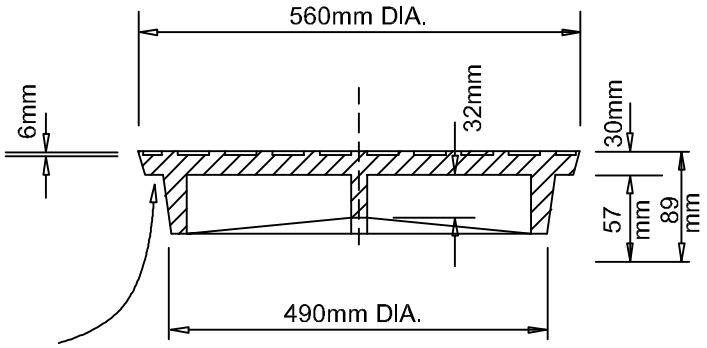

COVER

MACHINE SURFACE FOR NON ROCKING FIT IN ALL POSITIONS. ALLOW 2mm RAISED FACE IN CASTING FOR MACHINING.

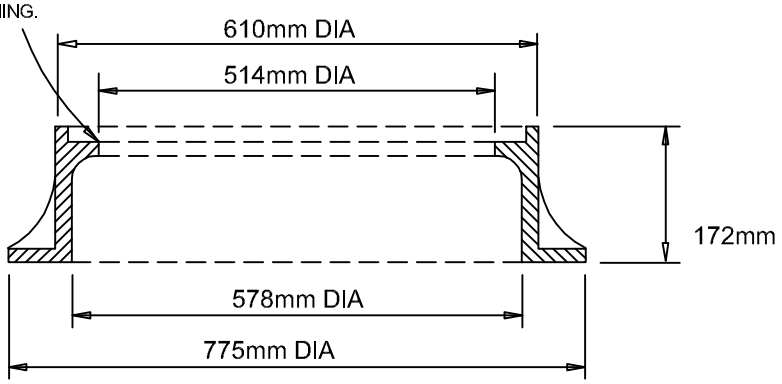

FRAME

TYPE - DOBNEY FOUNDRY NO. C-18
"TR" CASTINGS OR "K" EQUIVALENT.

APPROXIMATE WEIGHTS
COVER - 66 kg
FRAME - 90 kg

STORM SEWER MANHOLE COVER & FRAME	Langley City THE PLACE TO BE	DRAWN Dec 2019
		REVISED
		SCALE N.T.S.
		SS-D04

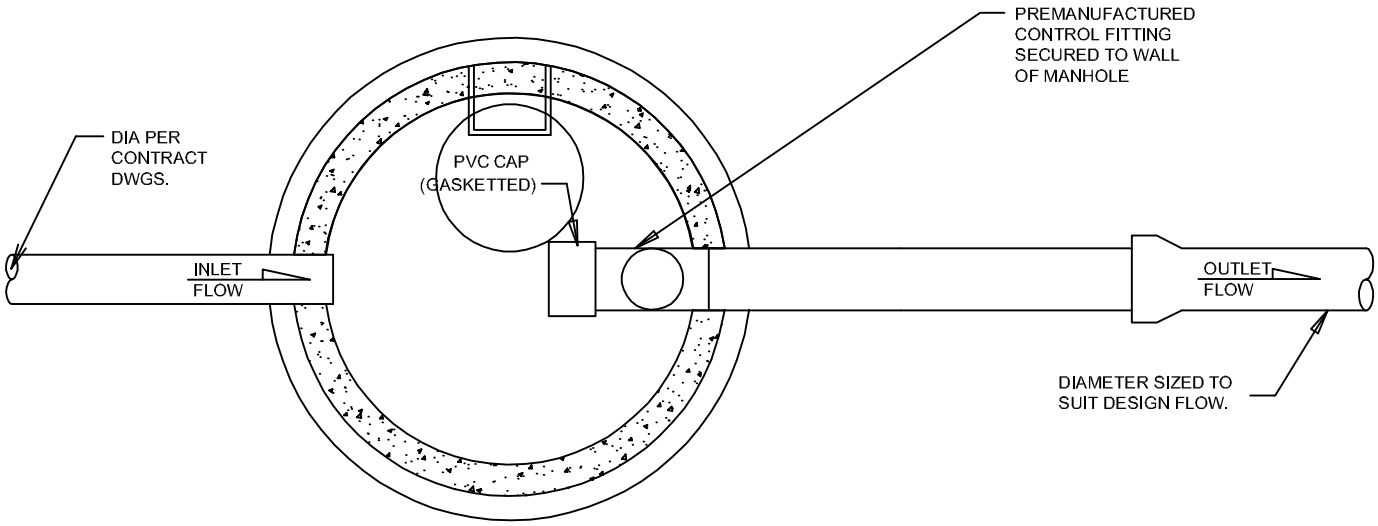

PLAN VIEW

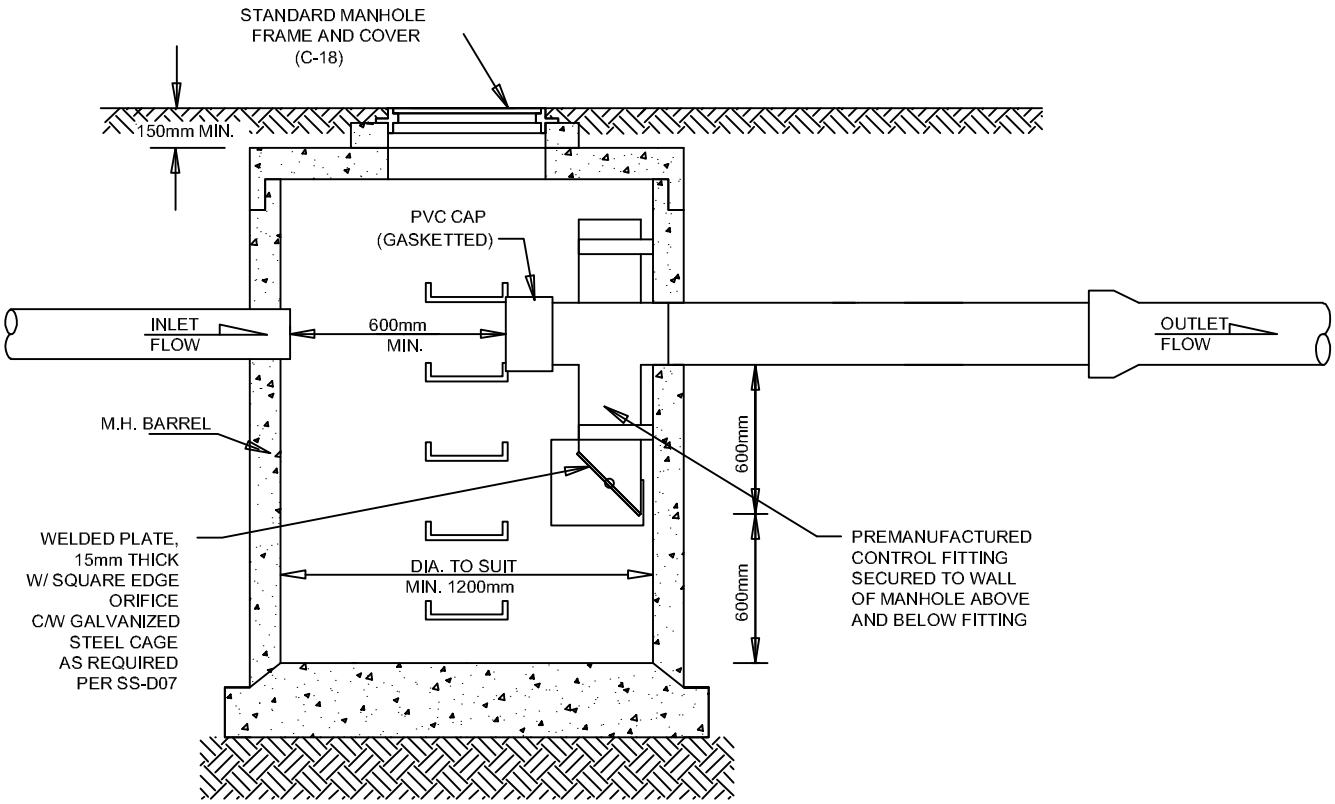

SECTION VIEW

FLOW CONTROL MANHOLE	Langley City THE PLACE TO BE	DRAWN Dec 2019
		REVISED
		SCALE N.T.S.
		SS-D05

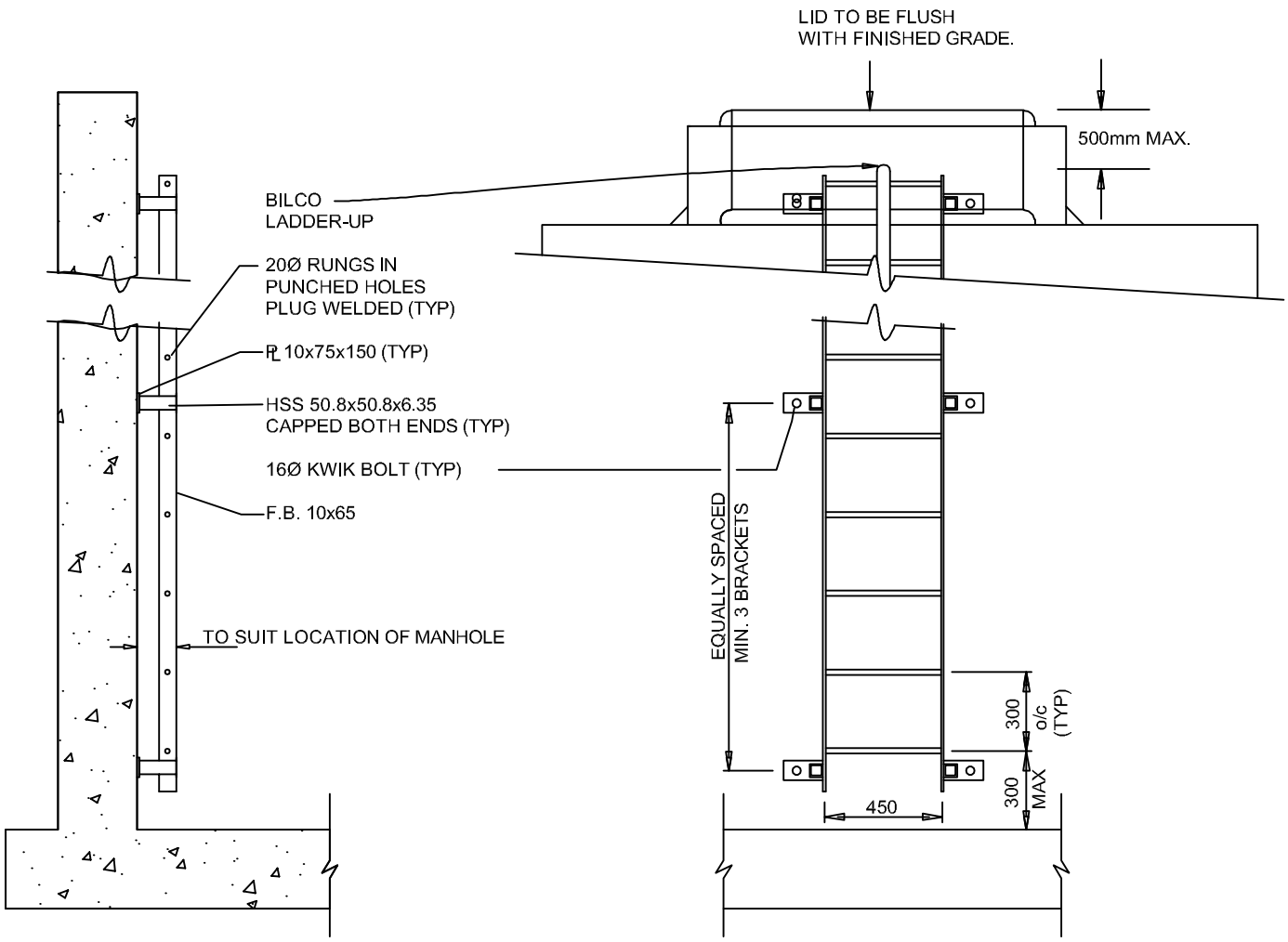

NOTE:

- WHERE LADDER CANNOT BE ANCHORED TO WALL OF TANK, SUITABLE ANCHORING TO FLOOR OF TANK IS PERMITTED. PARTS ETC. TO BE GALVANIZED OR OTHERWISE CORROSION RESISTANT/PROOF.
- ALL MATERIALS TO BE GALVANIZED OR CORROSION RESISTANT/PROOF.

TYPICAL DETENTION CHAMBER LADDER DETAIL AT EXTRACTION MANHOLE	Langley City THE PLACE TO BE	DRAWN Dec 2019
		REVISED
		SCALE N.T.S.
		SS-D06

Notes:

1. 50mm x 50mm 10 gauge wire mesh for Orifices 50mm to 100mm
2. 25mm x 25mm 12 gauge wire mesh for Orifices < 50mm
3. Galvanized finish.
4. Basket attached to flow control riser with stainless steel screws
5. Basket to extend min. of 150mm below lowest point of orifice plate.

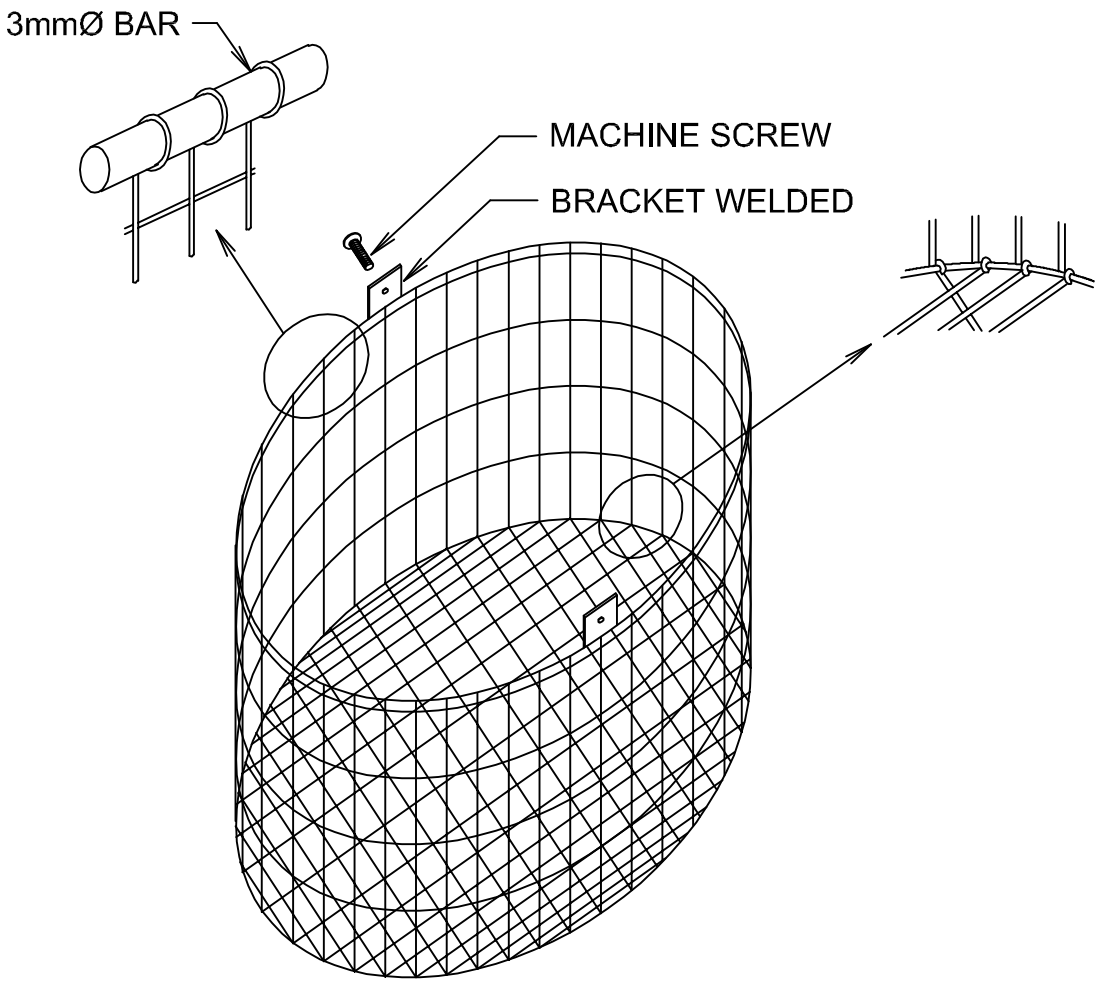

ORIFICE BASKET DETAIL

FOR ORIFICE DIAMETERS LESS THAN 100mm

DIAMETER OF BASKET TO MATCH O.D. OF CONTROL FITTING
(see SS-D05)

FLOW CONTROL STRUCTURE ORIFICE PROTECTION BASKET	Langley City THE PLACE TO BE	DRAWN Dec 2019
		REVISED
		SCALE N.T.S.
		SS-D07

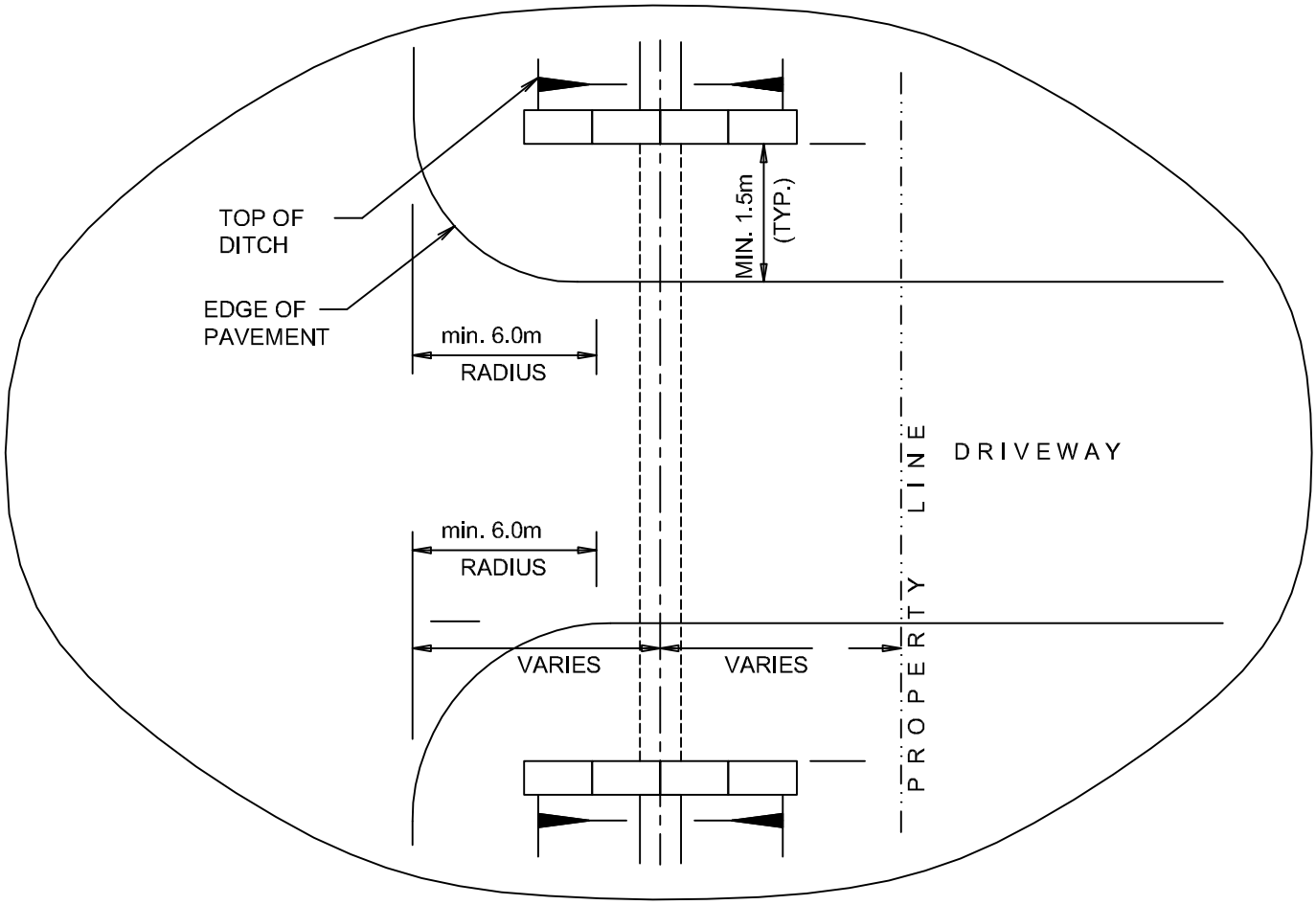

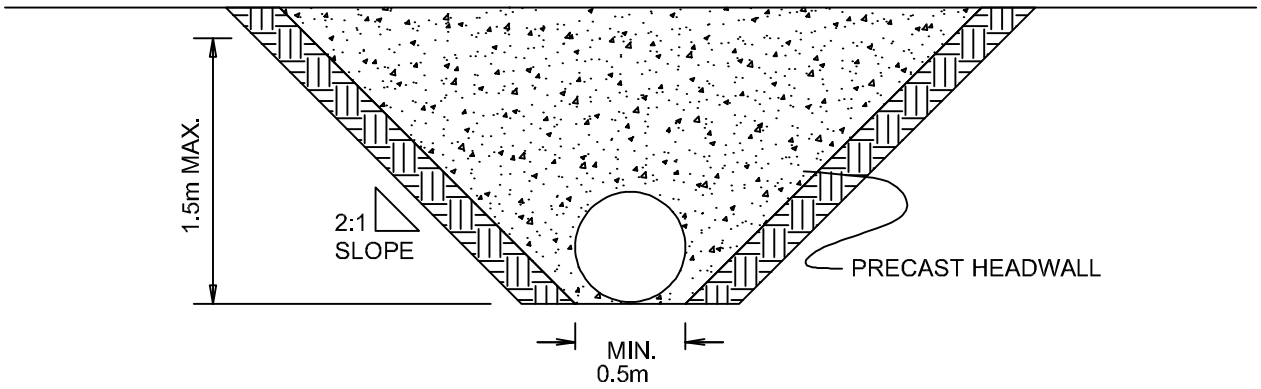

NOTE:

1. SPIGOT END OF PIPE (WHERE APPLICABLE) TO FACE DOWNSTREAM AND TO BE CLEAR OF ENDWALLS.

2. REFER TO CITY'S DESIGN CRITERIA MANUAL FOR DRIVEWAY WIDTHS.

TYPICAL DRIVEWAY CULVERT WITH CONCRETE ENDWALLS (REPLACES MMCD-S15)	Langley City THE PLACE TO BE	DRAWN Dec 2019
		REVISED
		SCALE N.T.S.
		SS-D08

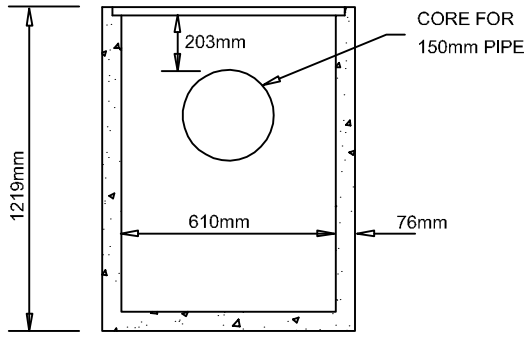

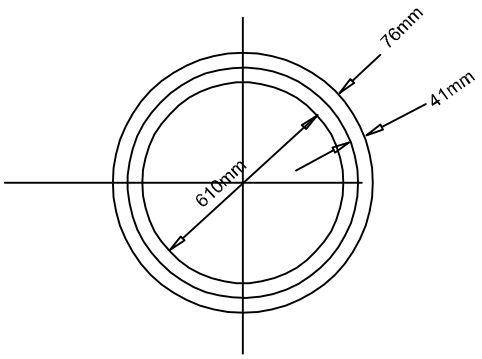

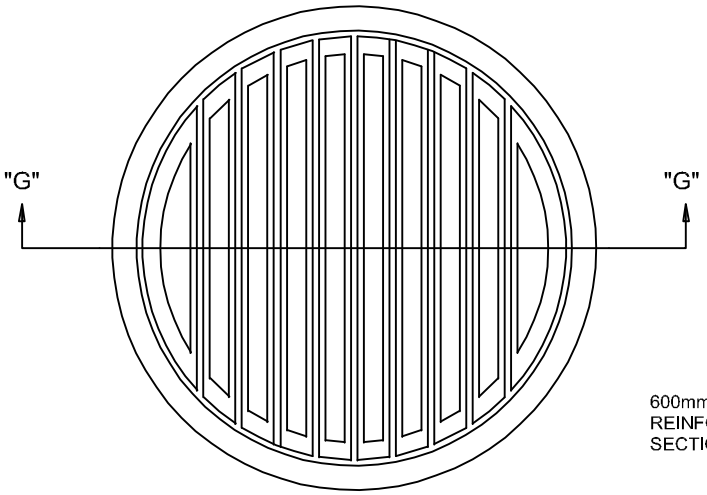

GRATE: DOBNEY FDRY NO. B-22 OR EQUIVALENT

PLAN

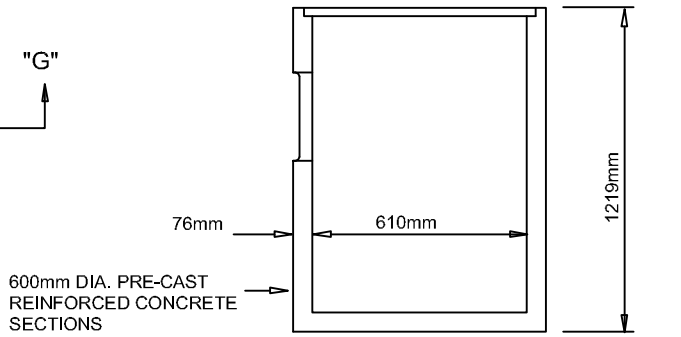

SECTION

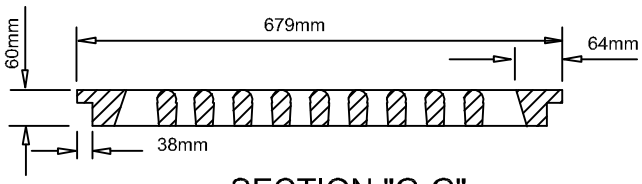

SECTION "G-G"

TYPICAL "IN DITCH"
C.B. CONSTRUCTION

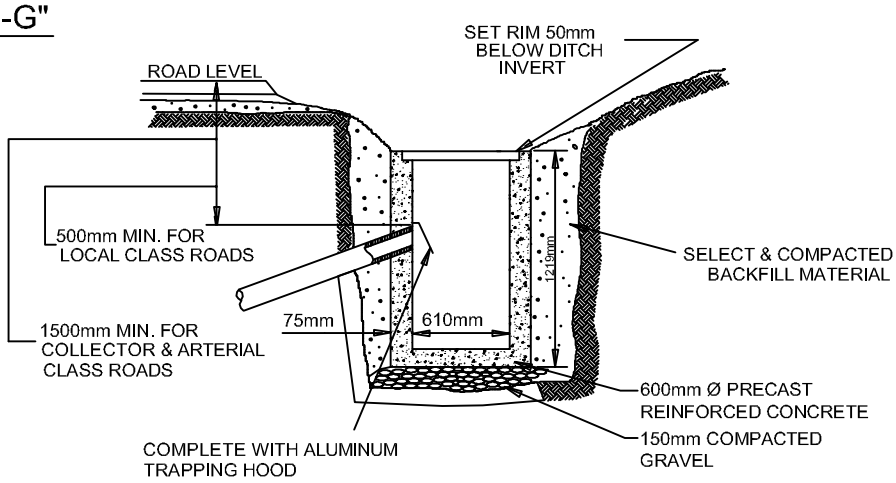

DITCH CATCH BASIN TYPE 1	Langley City THE PLACE TO BE	DRAWN Dec 2019
		REVISED
		SCALE N.T.S.
		SS-D09

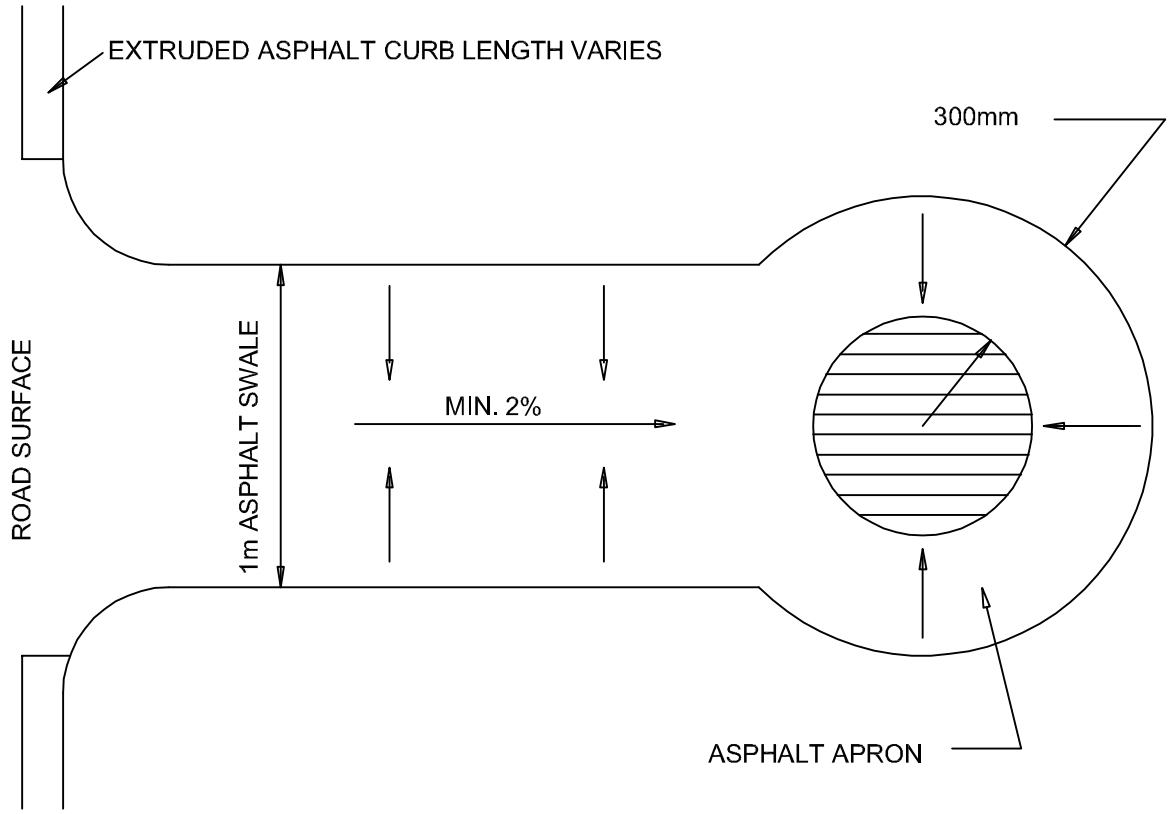

PLAN

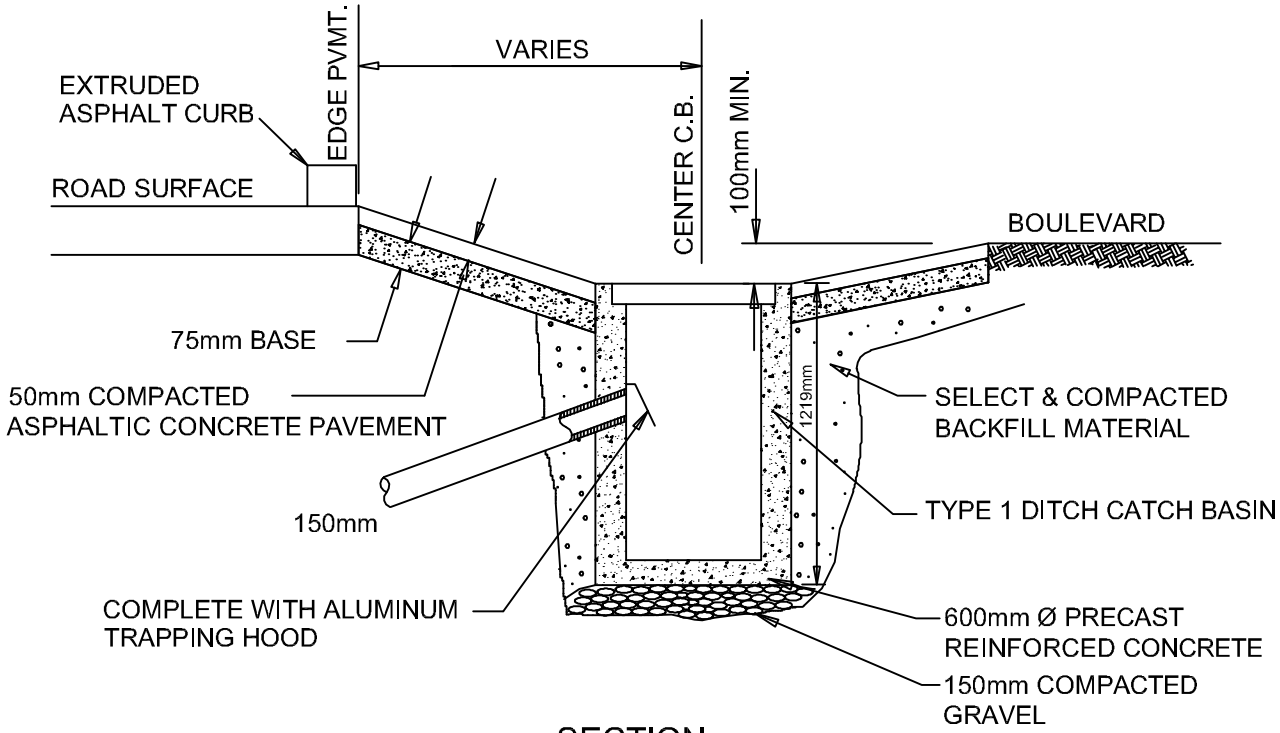

SECTION

TYPICAL CATCH BASIN WITH SWALE CONSTRUCTION	Langley City THE PLACE TO BE	DRAWN Dec 2019
		REVISED
		SCALE N.T.S.
		SS-D10

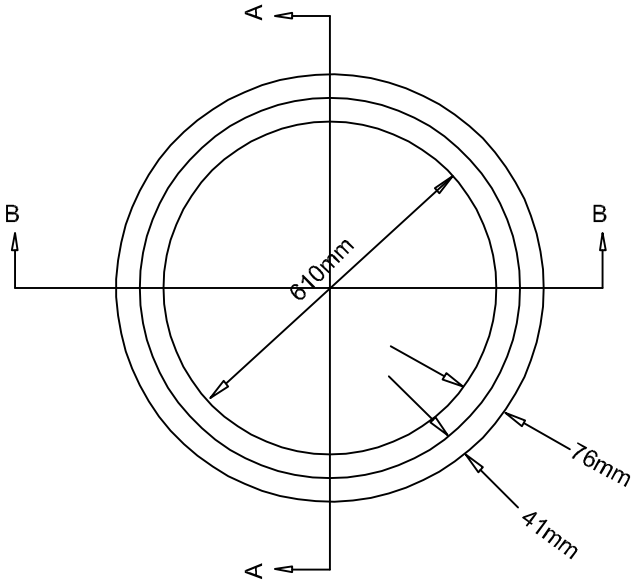

PLAN

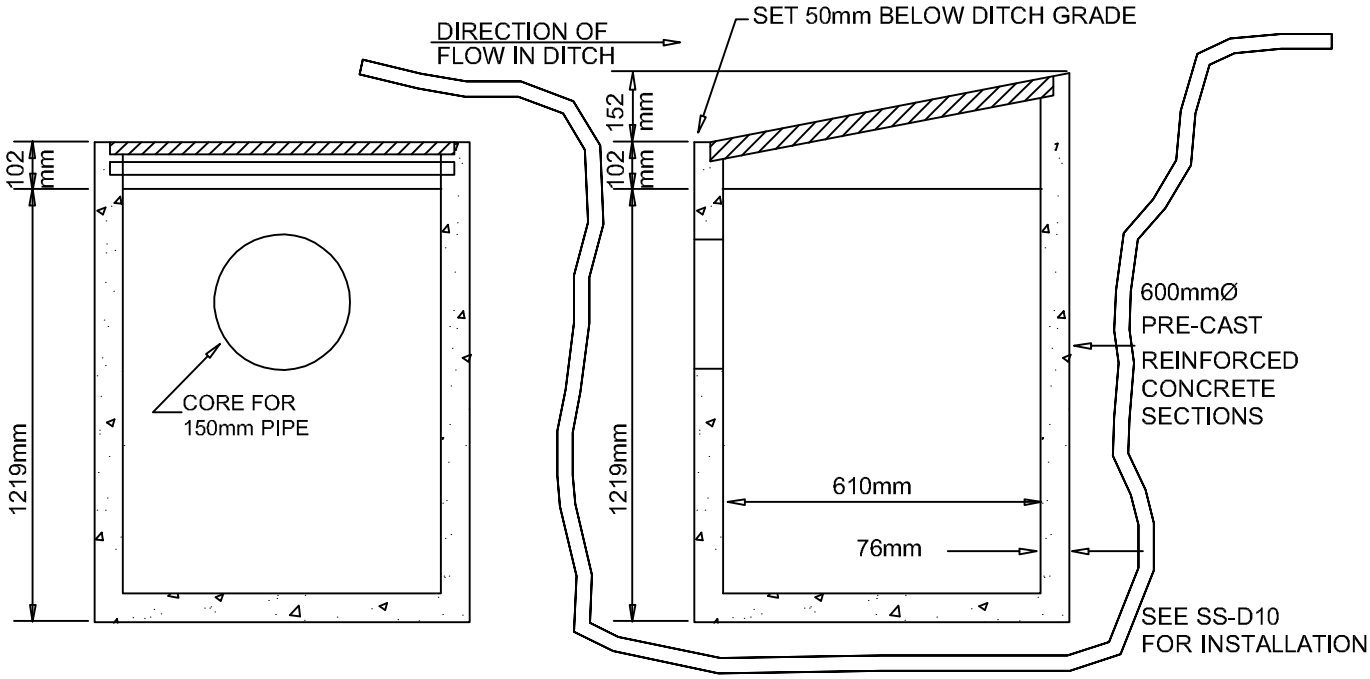

SECTION A-A

SECTION B-B

NOTE:
USE SAME GRATE AS FOR
TYPE I C.B.'S - DOBNEY
B-22 OR EQUIVALENT

DITCH CATCH BASIN TYPE II	Langley City THE PLACE TO BE	DRAWN Dec 2019
		REVISED
		SCALE N.T.S.
		SS-D11

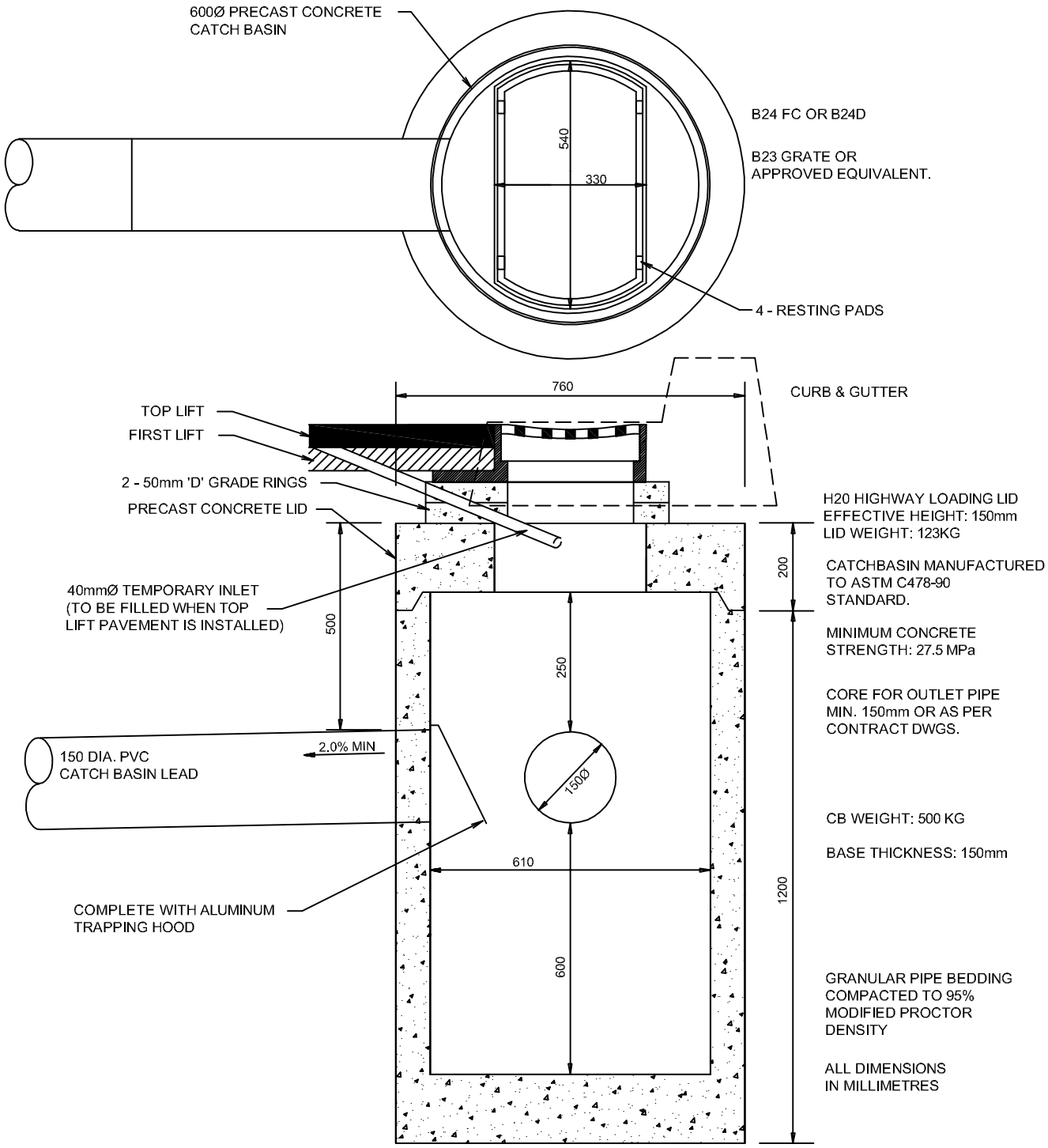

NOTES:

1 - LEADS SHALL BE 150mm IN DIAMETER FOR SINGLE BASINS AND 250mm IN DIAMETER FOR DOUBLE BASINS. DOUBLE CATCH BASINS SHALL NOT BE CONNECTED DIRECTLY TOGETHER BUT RATHER ONE BASIN WILL BE WYED INTO THE LEAD OF THE OTHER VIA A 150mm x 250mm WYE.

2 - TO PROTECT THE CATCH BASIN FROM FILLING WITH SOIL AND SEDIMENT DURING CONSTRUCTION INSTALL TEMPORARY INLET FILTER FILLED WITH WEED FREE KILN DRIED WOOD SHAVINGS OR EQUIVALENT.

STANDARD TOP INLET 600mm X 1200mm CATCH BASIN (REPLACES MMCD-S11)	Langley City THE PLACE TO BE	DRAWN Dec 2019 REVISED SCALE N.T.S. SS-D12

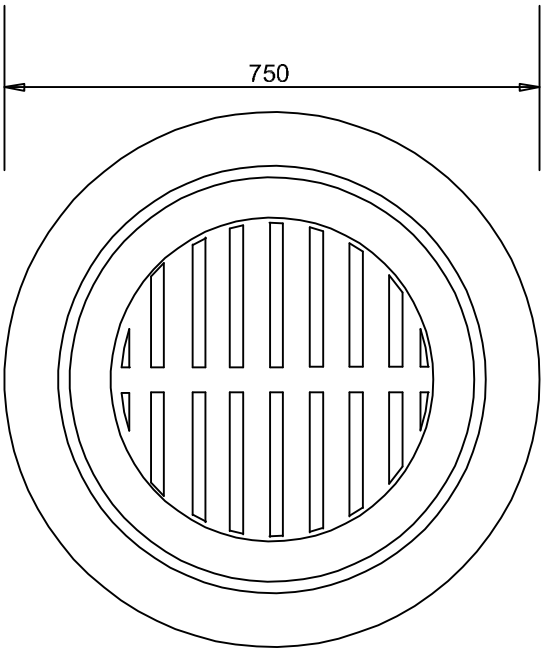

LANGLEY BJ26B
CONCRETE GROUP
FRAME & GRATE
SHOWN
H2O LOAD RATING
EFFECTIVE HEIGHT OF
CASTING: 65mm

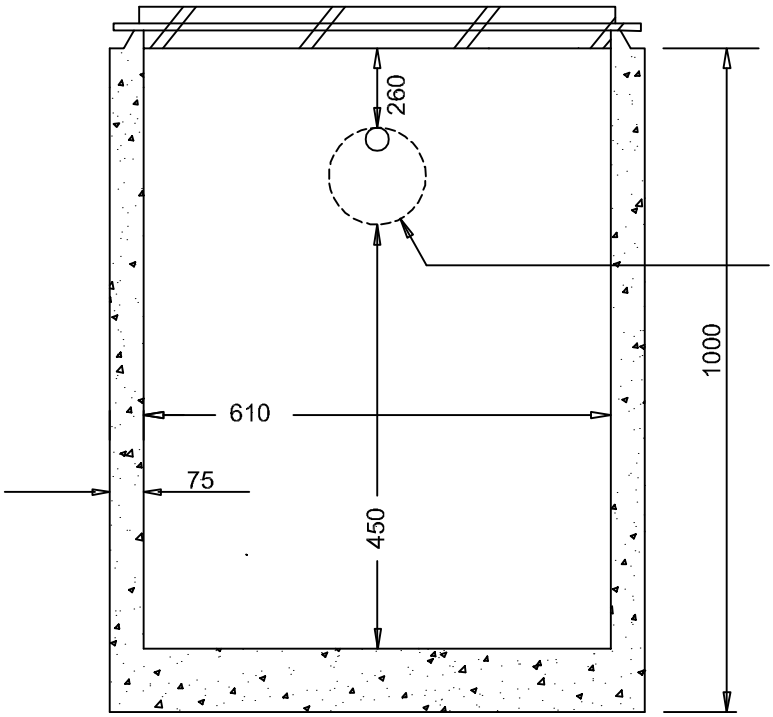

DIA. CORED PER
CONTRACT DWGS.

ALL DIMENSIONS IN MILLIMETRES

NOTES:
1. RECOMMENDED FOR PARKING LOT APPLICATIONS
2. MIN. CONCRETE STRENGTH: 27.5 MPa.
3. COMES WITH 150mm BASE, 200mm CORE, 75mm WEEPING HOLE.
4. MANUFACTURED TO ASTM C478-90 STANDARD.
5. APPROX. WEIGHT: 500 KG

STANDARD 600mm x 1000mm (NOMINAL) CATCH BASIN PARKING LOT APPLICATION	Langley City THE PLACE TO BE	DRAWN Dec 2019
		REVISED
		SCALE N.T.S.
		SS-D13

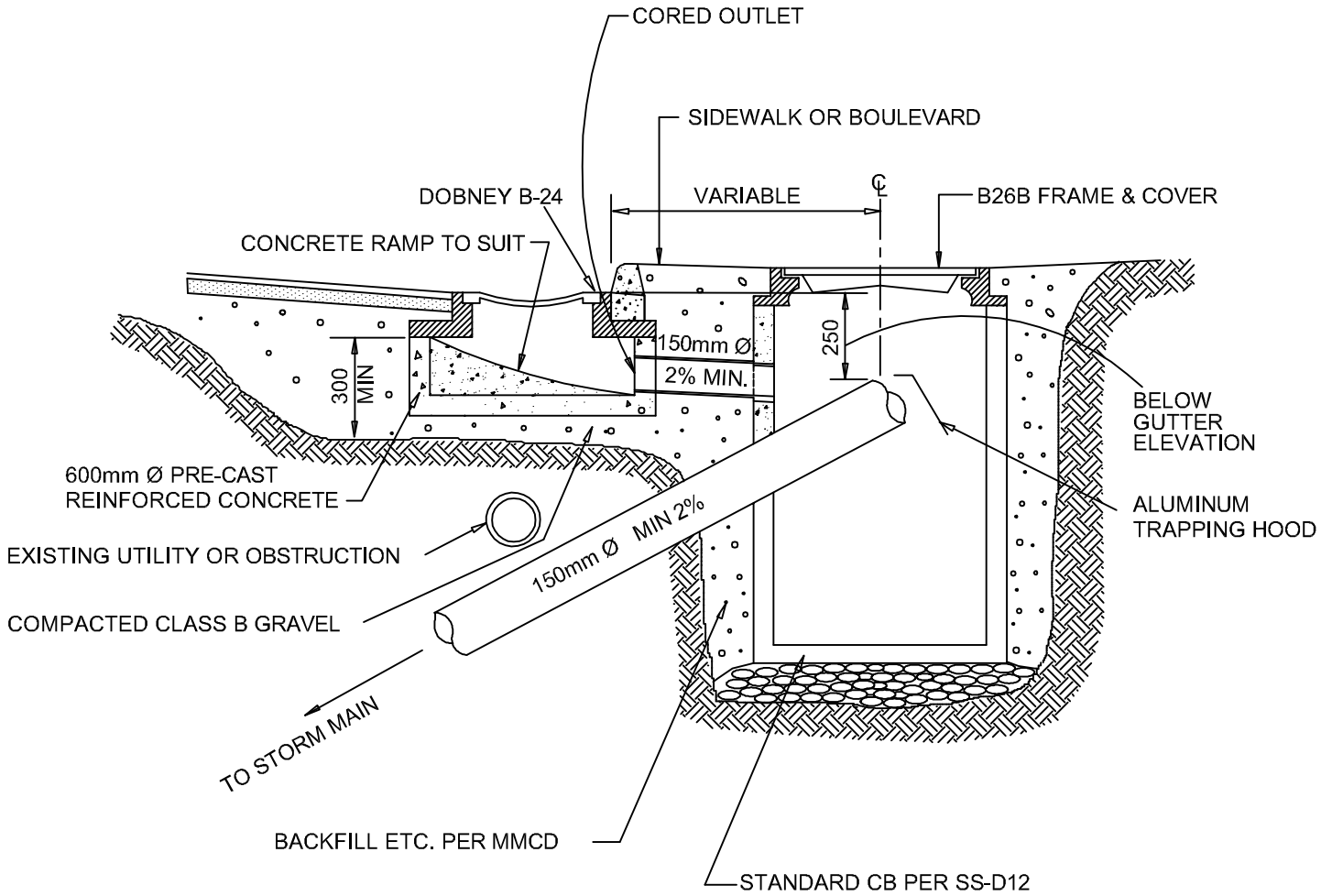

TYPICAL CATCH BASIN CONSTRUCTION (WHERE SHALLOW C.B. IS REQUIRED) (REPLACES MMCD-S11)	Langley City THE PLACE TO BE	DRAWN Dec 2019
		REVISED
		SCALE N.T.S.
		SS-D14

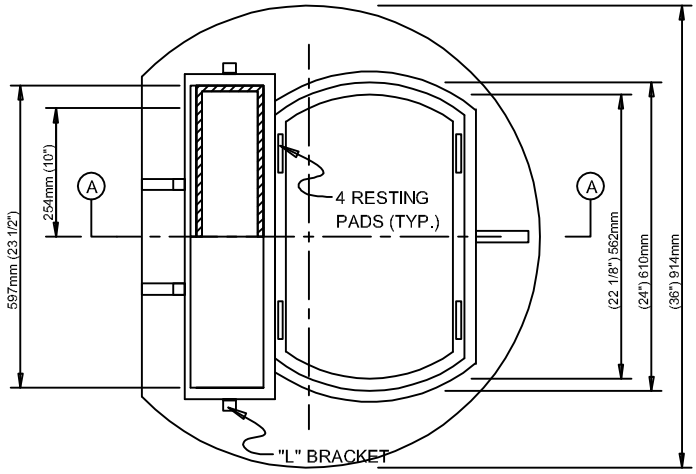

TOP VIEW

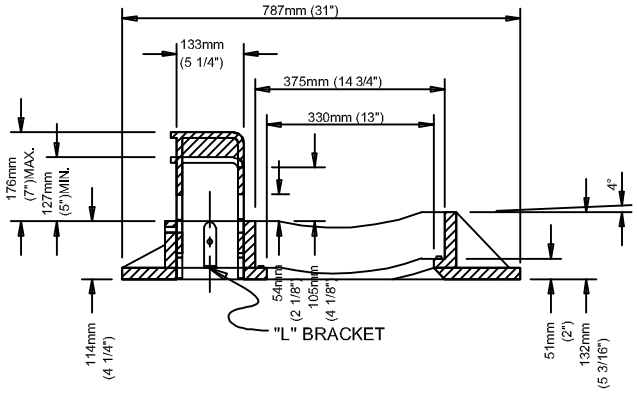

SECTION VIEW A-A

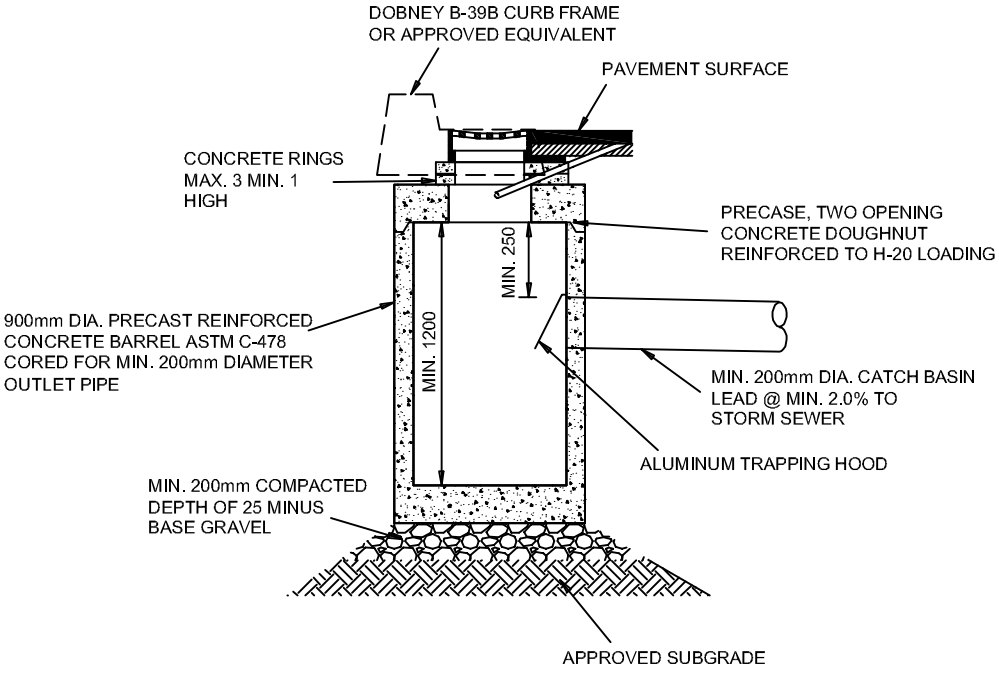

NOTES:

1. CATCH BASIN GRATE SHALL SLOPE TOWARDS CURB FACE
2. CATCH BASIN FRAME TO BE INSTALLED 25mm BELOW GUTTER GRADE WITH APRON SLOPED TO MEET TOP OF FRAME AND TOWELED SMOOTH.

SIDE INLET CATCH BASIN FRAME	Langley City THE PLACE TO BE	DRAWN Apr 2021
		REVISED
		SCALE N.T.S.
		SS-D15

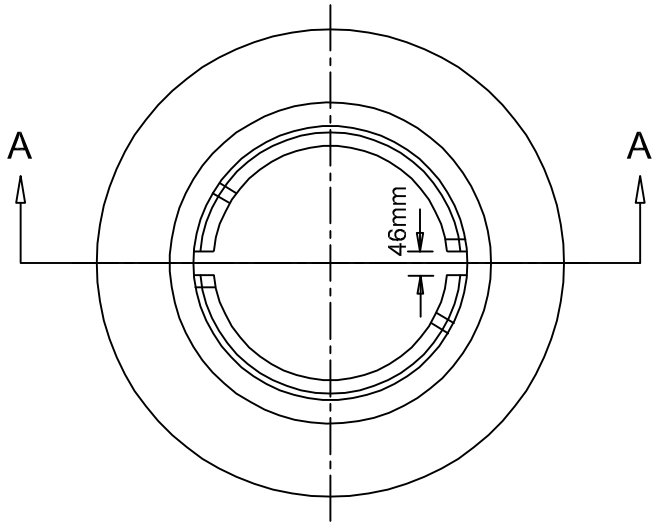

TOP VIEW OF BOX (w/o LID)

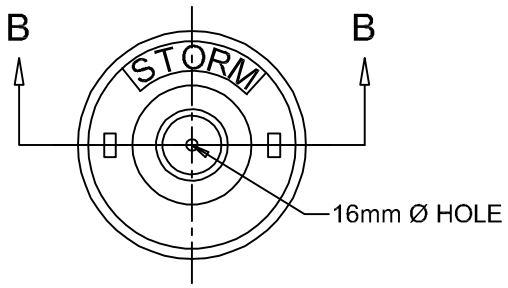

TOP VIEW OF LID

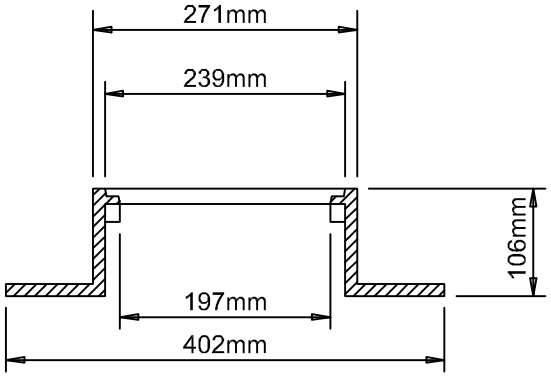

ELEVATION/SECTION A-A

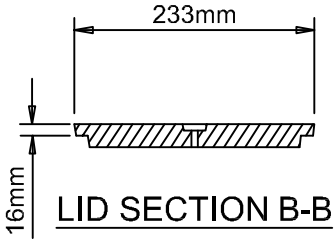

LID SECTION B-B

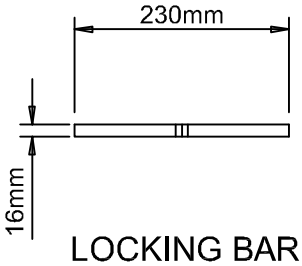

LOCKING BAR

TYPE - DOBNEY FOUNDRY NO. D-14A

APPROX. WT: 27kg

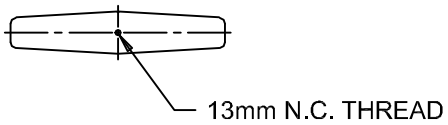

200Ø INSPECTION CHAMBER & CLEAN OUT LID AND FRAME	Langley City THE PLACE TO BE	DRAWN Dec 2019
		REVISED
		SCALE N.T.S.
		SS-D16

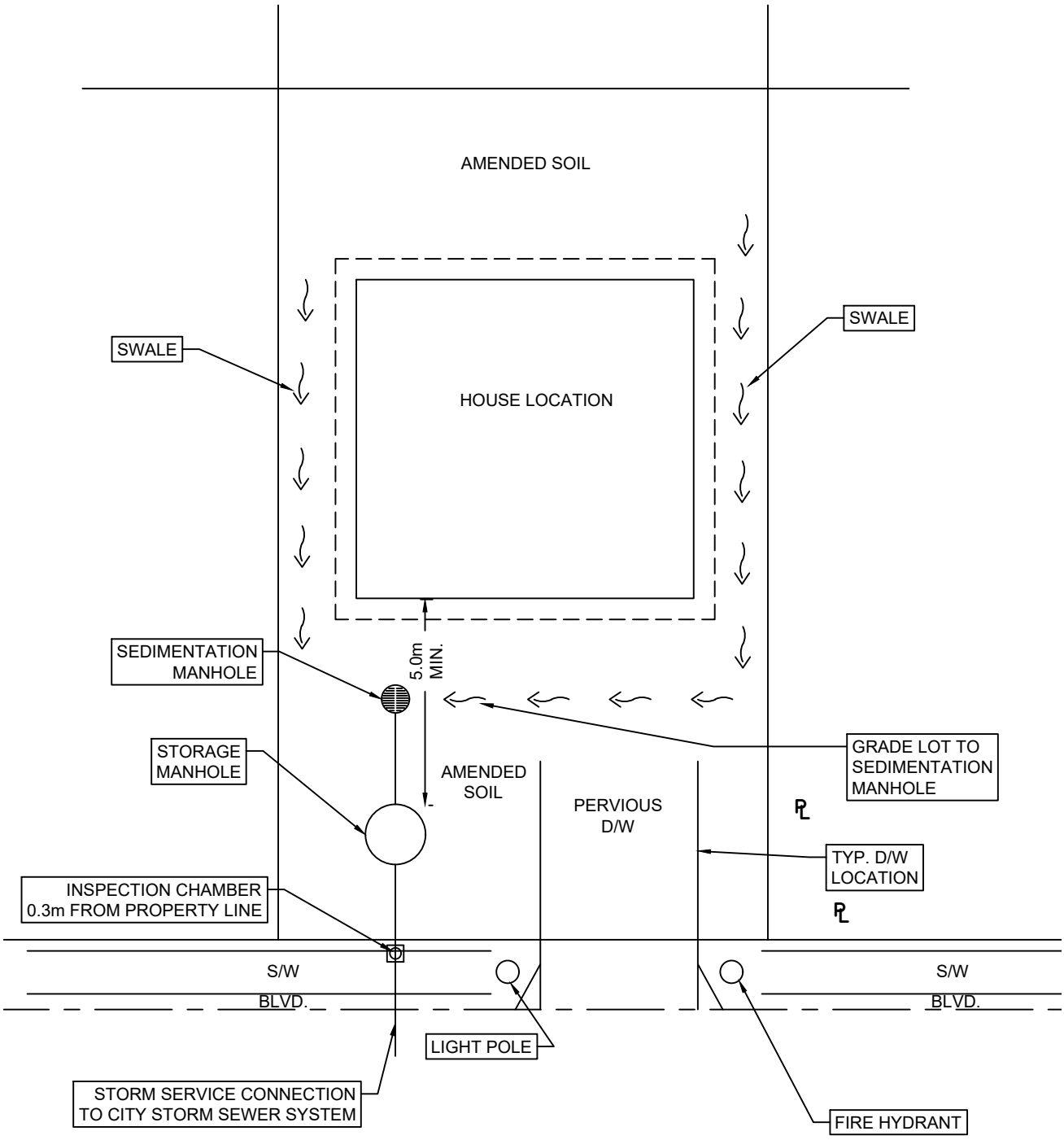

1 / - TYPICAL PLAN

NOT TO SCALE

TYPICAL RAINWATER MANAGEMENT SYSTEM SINGLE FAMILY RESIDENTIAL	Langley City THE PLACE TO BE	DRAWN April 2020
		REVISED April 2021
		SCALE N.T.S.
		SS-D17

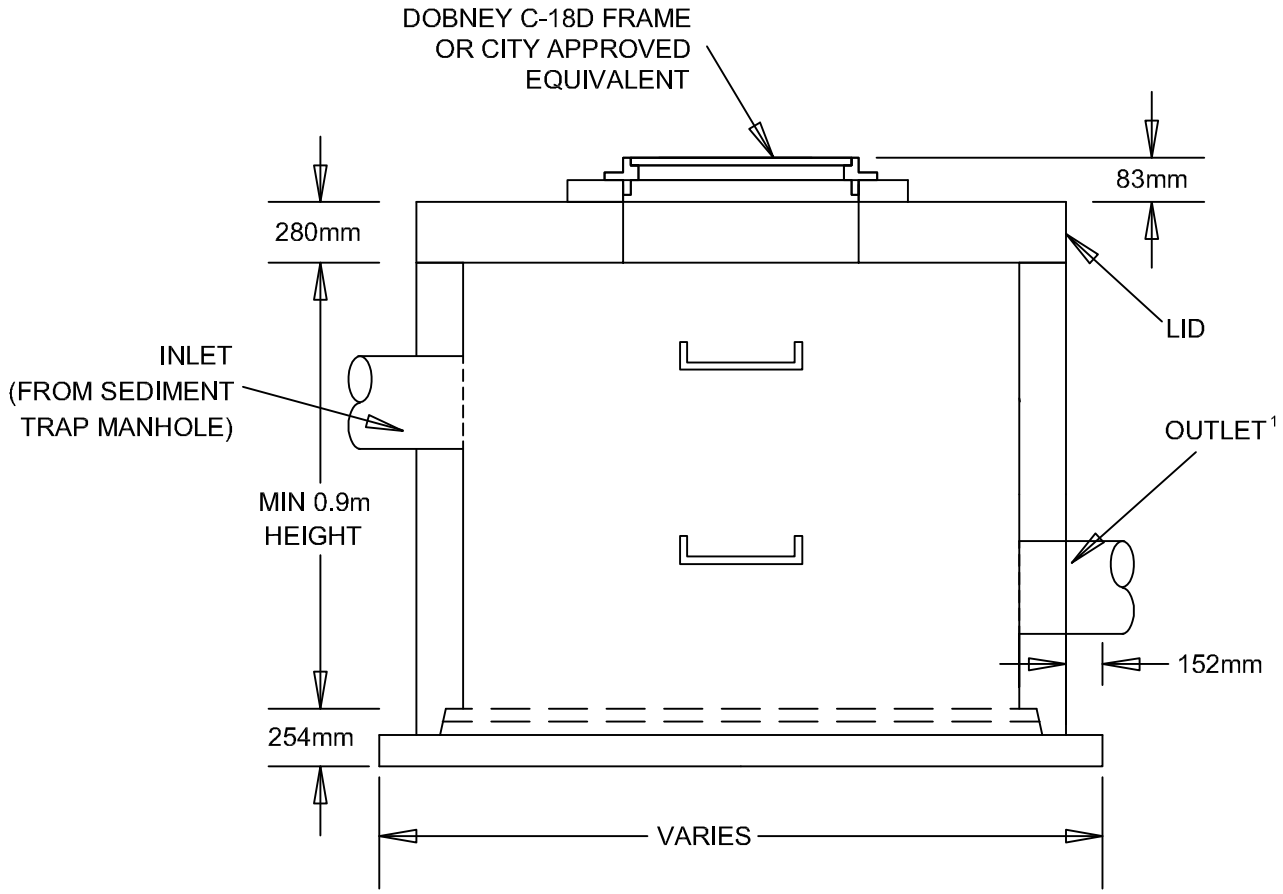

NOTES:

1. OUTLET INVERT SHALL BE SET TO PROVIDE THE REQUIRED GRADE TO DISCHARGE TO CITY STORM SEWER SYSTEM.
2. REFER TO MMCD FOR MANHOLE INSTALLATION DETAILS.
3. ALL MANHOLES TO BE PRECAST CONCRETE OR CITY APPROVED EQUIVALENT.

STORAGE MANHOLE FOR SINGLE FAMILY RESIDENTIAL DWELLINGS	Langley City THE PLACE TO BE	DRAWN May 2021
		REVISED
		SCALE N.T.S.
		SS-D18

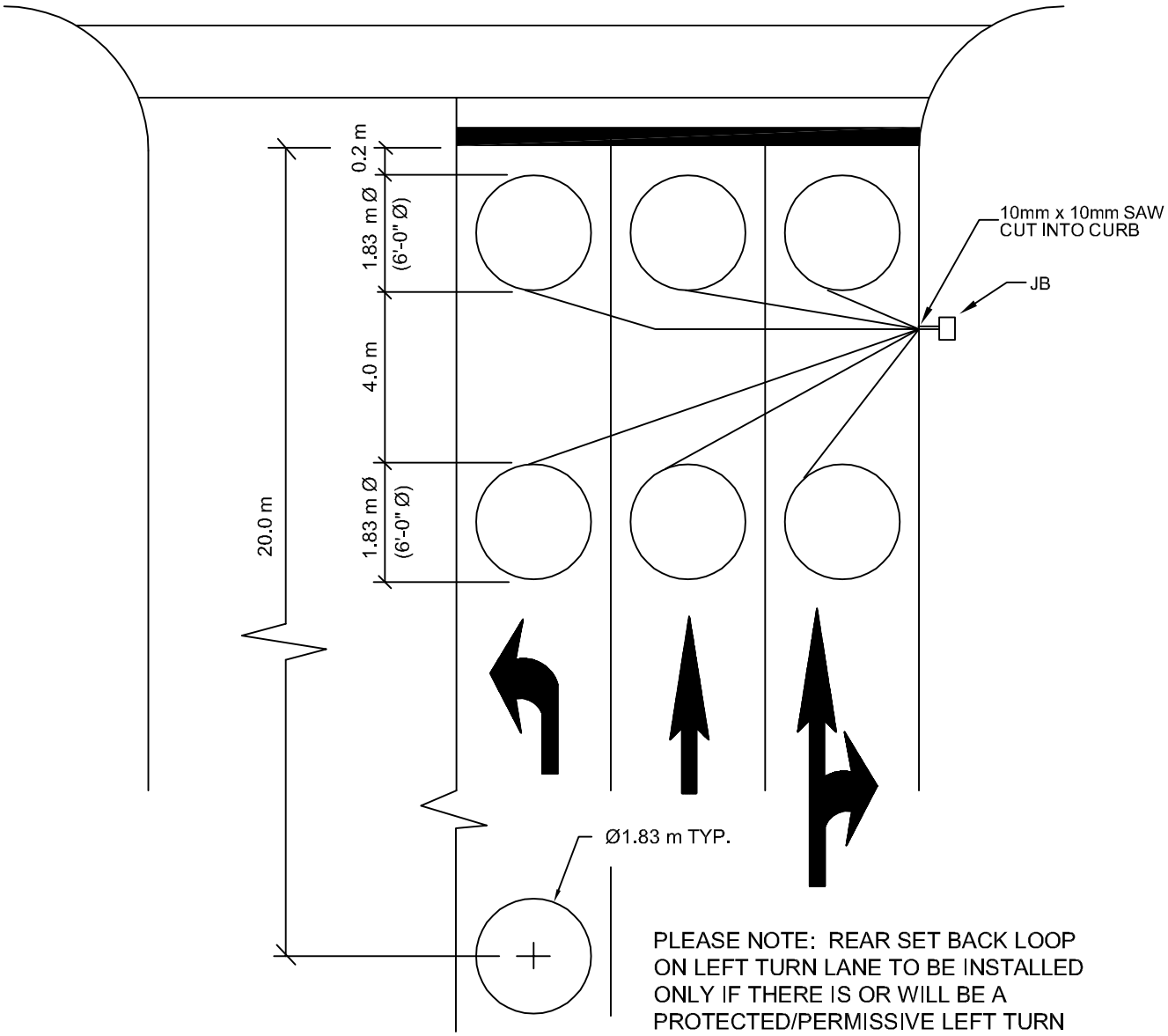

PLEASE NOTE: REAR SET BACK LOOP ON LEFT TURN LANE TO BE INSTALLED ONLY IF THERE IS OR WILL BE A PROTECTED/PERMISSIVE LEFT TURN PHASE. CONFIRM WITH CoL BEFORE INSTALLATION.

DETECTOR LOOP DIMENSIONS TYPICAL	Langley City THE PLACE TO BE	DRAWN Dec 2019
		REVISED
		SCALE N.T.S.
		SS-E01

TYPICAL PEDESTRIAN BUTTON MOUNTING LOCATION

(SINGLE POLE PER CORNER)

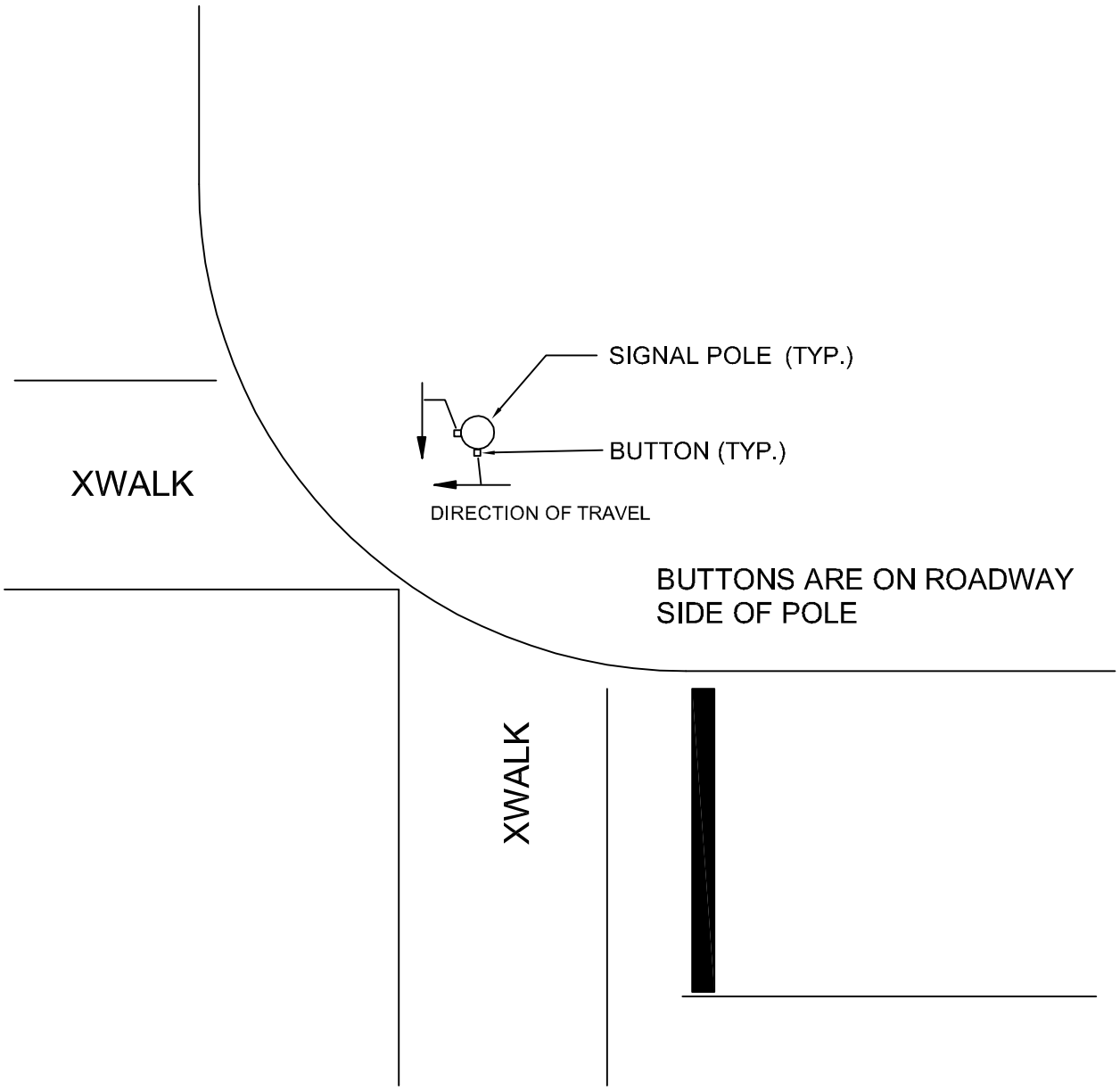

PEDESTRIAN BUTTON LOCATION SINGLE POLE PER CORNER TYPICAL	Langley City THE PLACE TO BE	DRAWN Dec 2019
		REVISED
		SCALE N.T.S.
		SS-E02

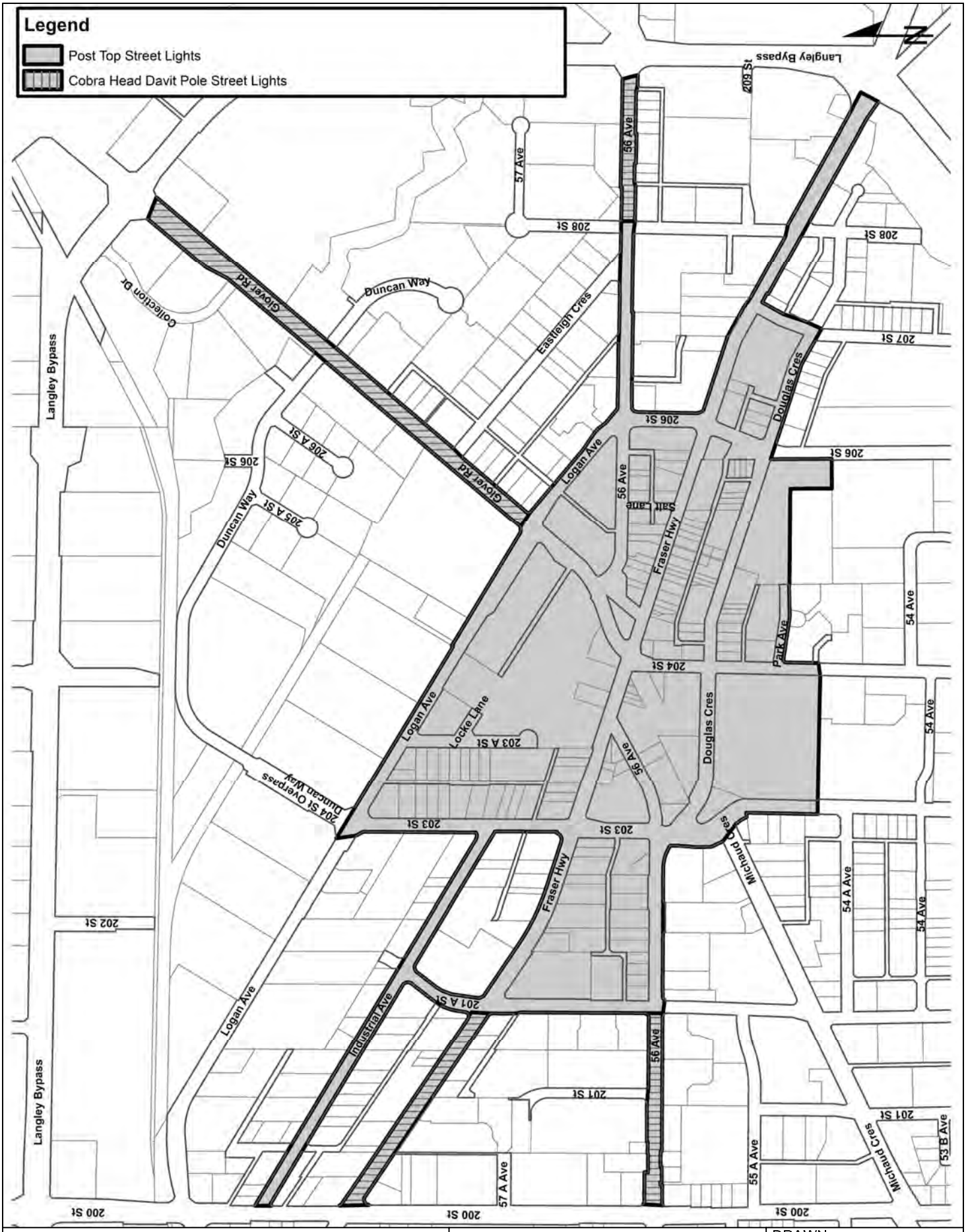

PUBLIC REALM FOR BLACK
COLOUR THEME
POLES AND STREET FURNITURE

Langley City
THE PLACE TO BE

DRAWN	Dec 2019
REVISED	
SCALE	N.T.S.
	SS-E03

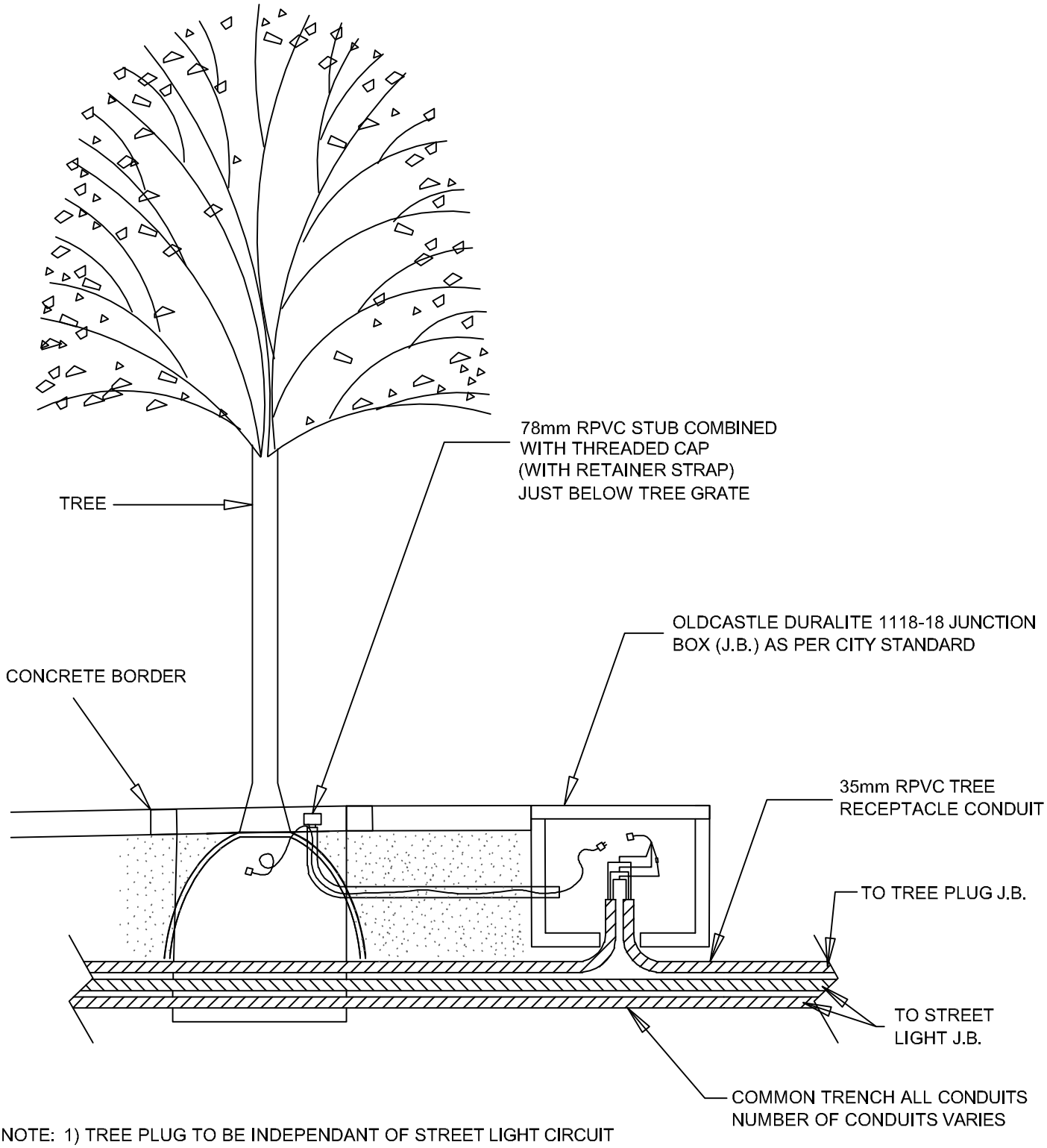

NOTE: 1) TREE PLUG TO BE INDEPENDANT OF STREET LIGHT CIRCUIT

2) ALL CORD ENDS TO BE WATERTIGHT COMMERCIAL GRADE ISA 125V

3) TREE PLUG TO HAVE "TRON HEB AA WATER-RESISTANT FUSE HOLDER" COMBINED WITH 10A BUSS KTK FUSE AND 2 'L' TYPE INSULATING BOOTS, TAPED ON BOTH ENDS

TREE PLANTING - ELECTRIC JUNCTION BOX

Langley City
THE PLACE TO BE

DRAWN	Dec 2019
REVISED	
SCALE	N.T.S.

SS-E04

City of Langley

SERVICE CONNECTION RECORD CARD

Date of Application_____

Capital Project/SD/RZ/BP No._____

House No: Street Name: Lot No: Plan No: Roll No:

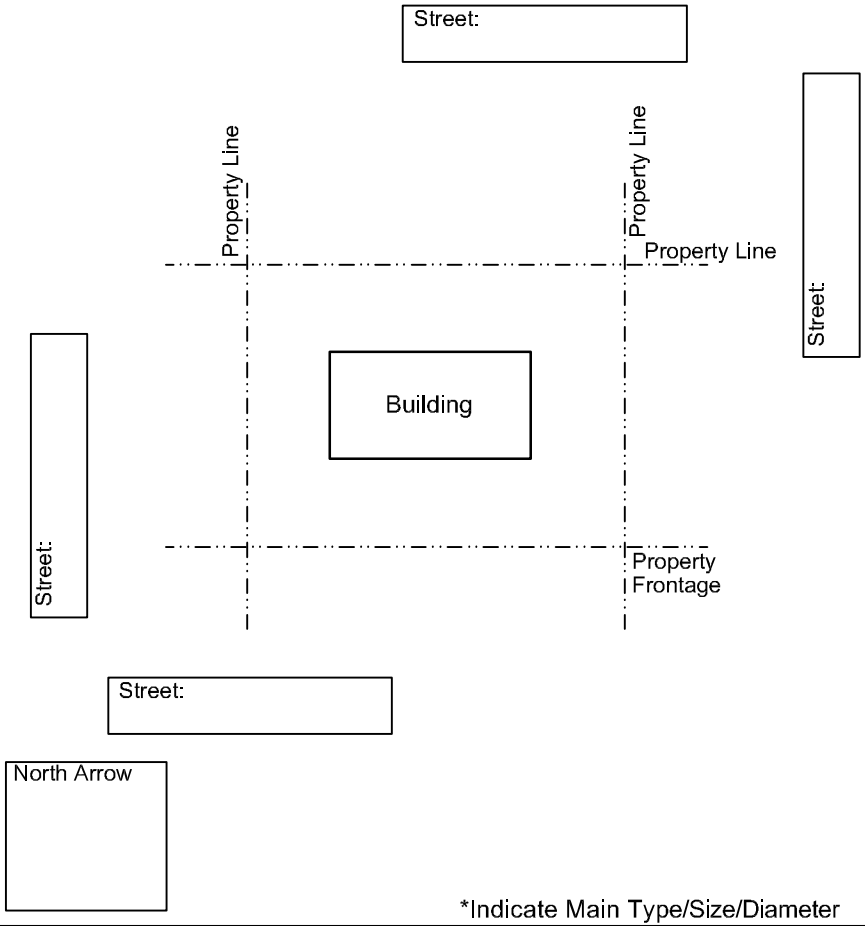

*Indicate Main Type/Size/Diameter

STORM		WATER		SANITARY	
(RE)CONNECTION DATE		(RE)CONNECTION DATE		(RE)CONNECTION DATE	
Size (mm)		Size (mm)		Size (mm)	
Material		Material		Material	
Length (m)		Distance from main to Curb Stop		Length (m)	
IC/Cleanout		Corp. Stop		IC/Cleanout	
Fitting at Main		Curb Stop		Fitting at Main	
_____Bends		Couplings		_____Bends	
Depth at Property Line		Reducer		Depth at Property Line	
Distance from M.H. to fitting on Main		Depth at Property Line		Distance from M.H. to fitting on Main	
Measured from M.H. #		Meter Size/Type/Location		Measured from M.H. #	
Right of Way (Y / N)		Right of Way (Y / N)		Right of Way (Y / N)	
Works Completed By		Works Completed By		Works Completed By	

Comments

Note: Digital copy to be provided by City of Langley upon request

SAMPLE SERVICE RECORD CARD

DRAWN Dec 2019

REVISED

SCALE N.T.S.

SS-G01

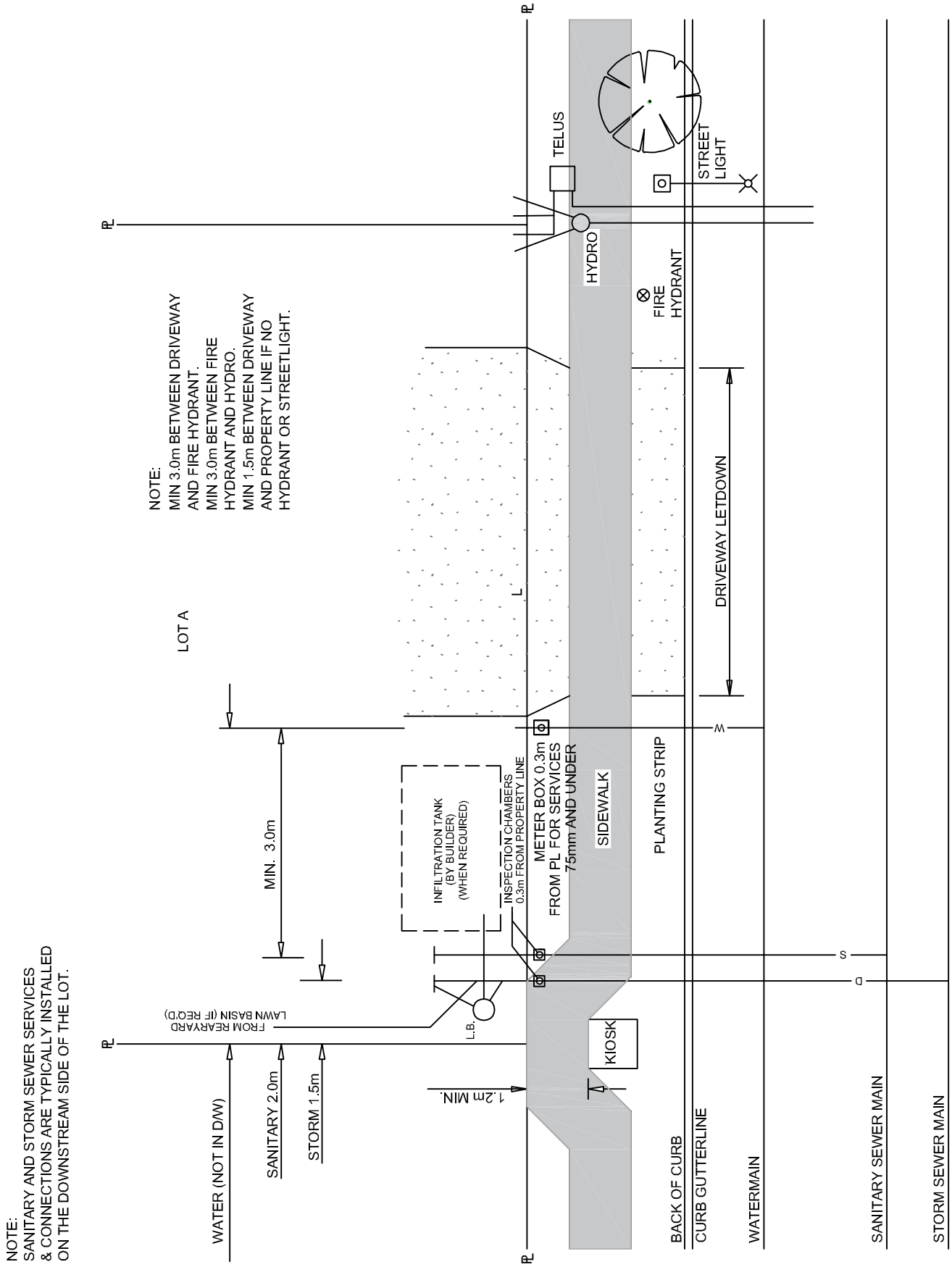

TYPICAL LOCATION OF CITY SERVICE CONNECTIONS

Langley City
THE PLACE TO BE

DRAWN	Dec 2019
REVISED	
SCALE	N.T.S.

SS-G02

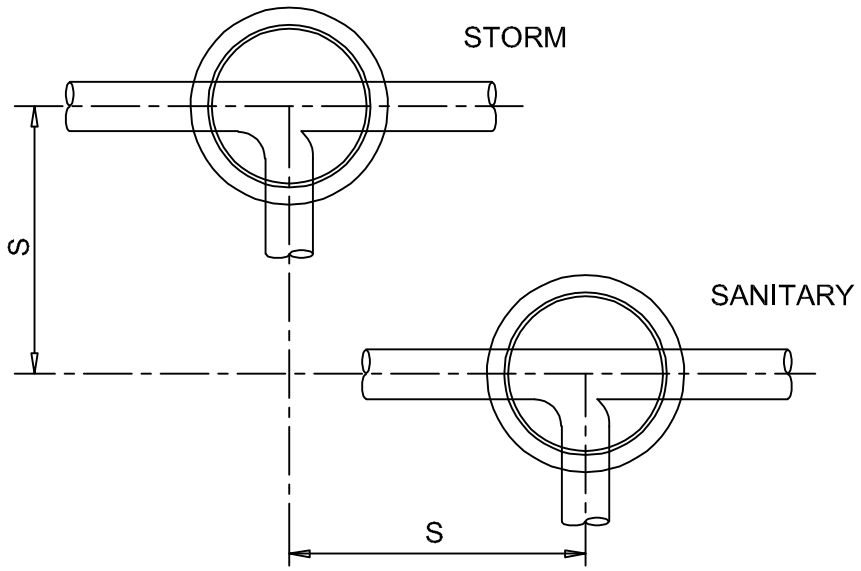

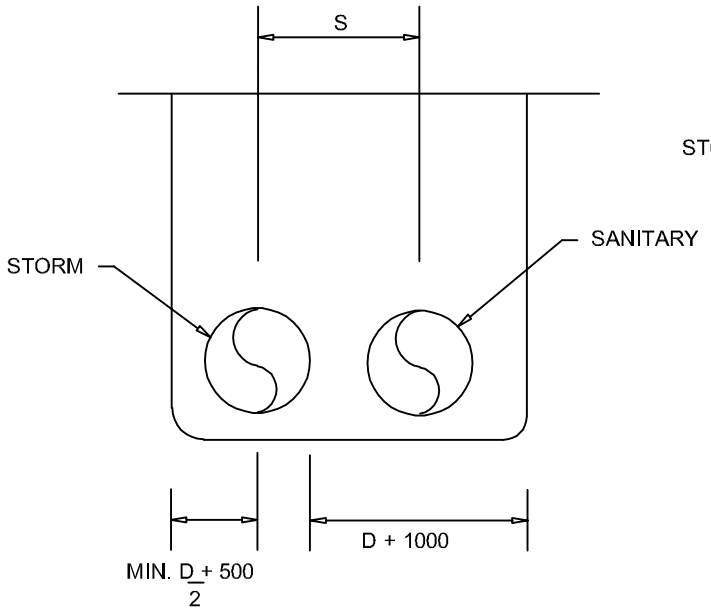

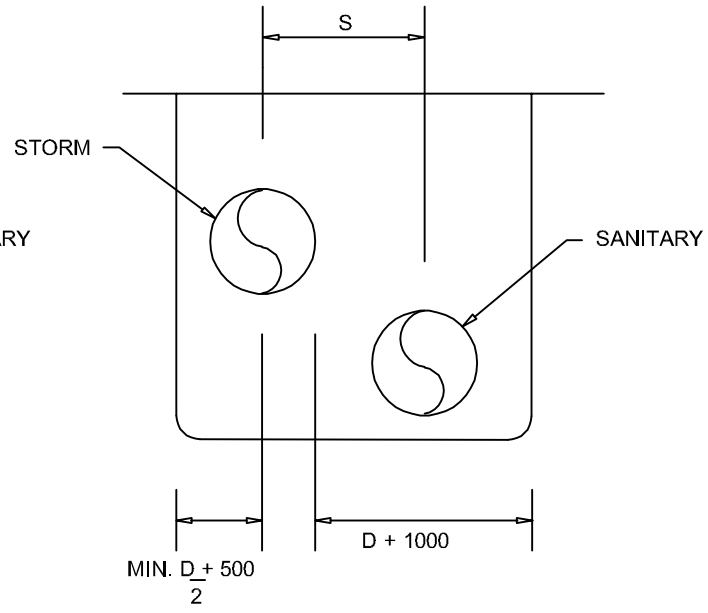

$$\text{MINIMUM SEPARATION (S)} = \left(\frac{\text{I.D. STORM MH} + \text{I.D. SAN MH}}{2} \right) + 150\text{mm}$$

NOTE: MINIMUM 1.0m BETWEEN PIPES

COMMON TRENCH INSTALLATION	Langley City THE PLACE TO BE	DRAWN Dec 2019
		REVISED
		SCALE N.T.S.
		SS-G03

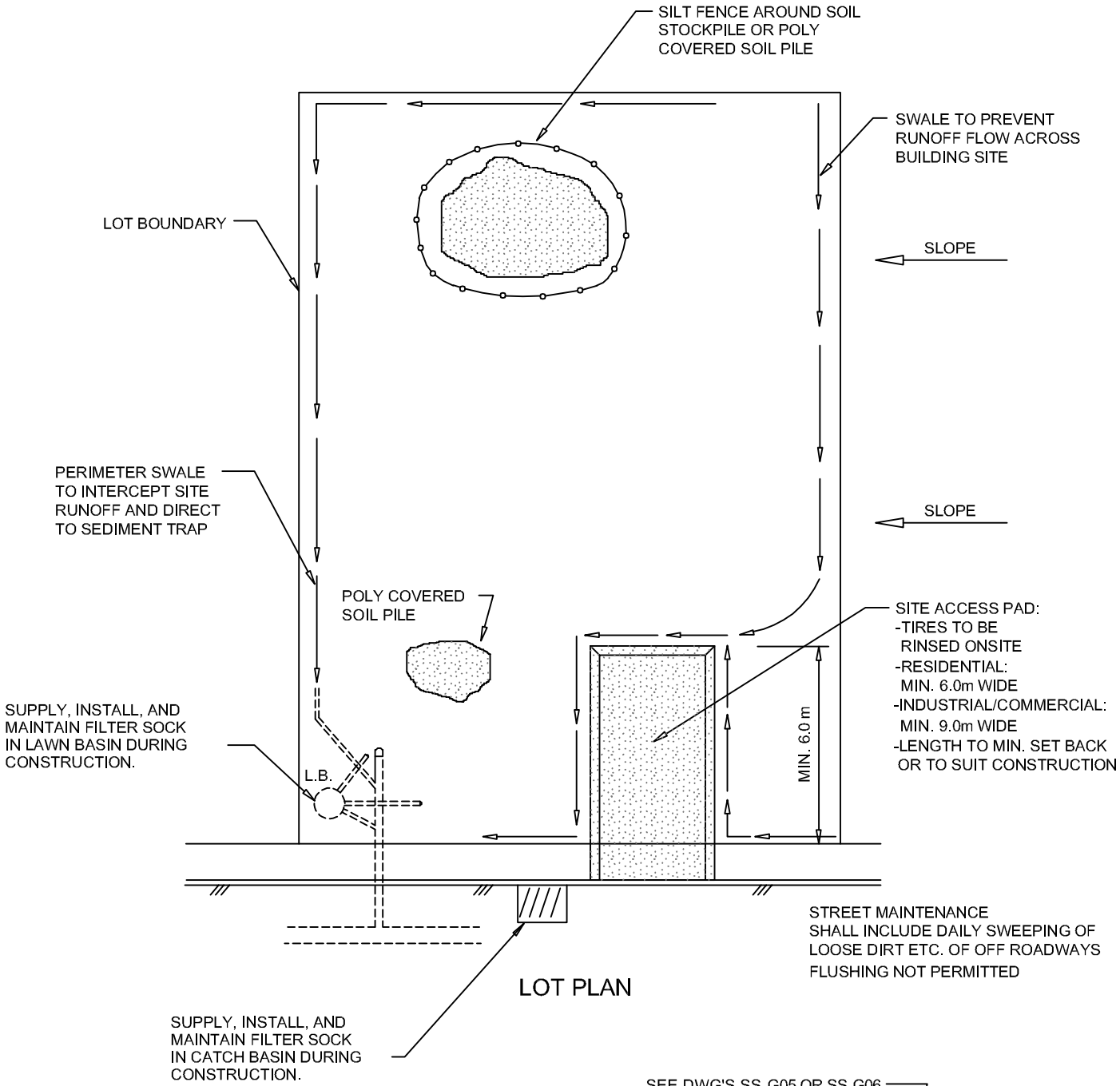

LOT PLAN

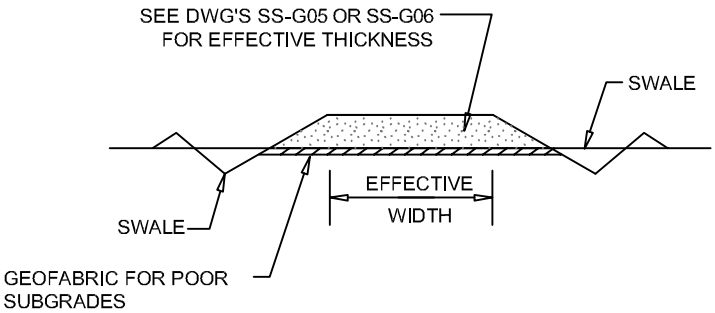

PROPOSED DRIVEWAY SECTION DETAIL

TEMPORARY LOT SILTATION CONTROL

Langley City
THE PLACE TO BE

DRAWN	Dec 2019
REVISED	
SCALE	N.T.S.
	SS-G04

SECTION

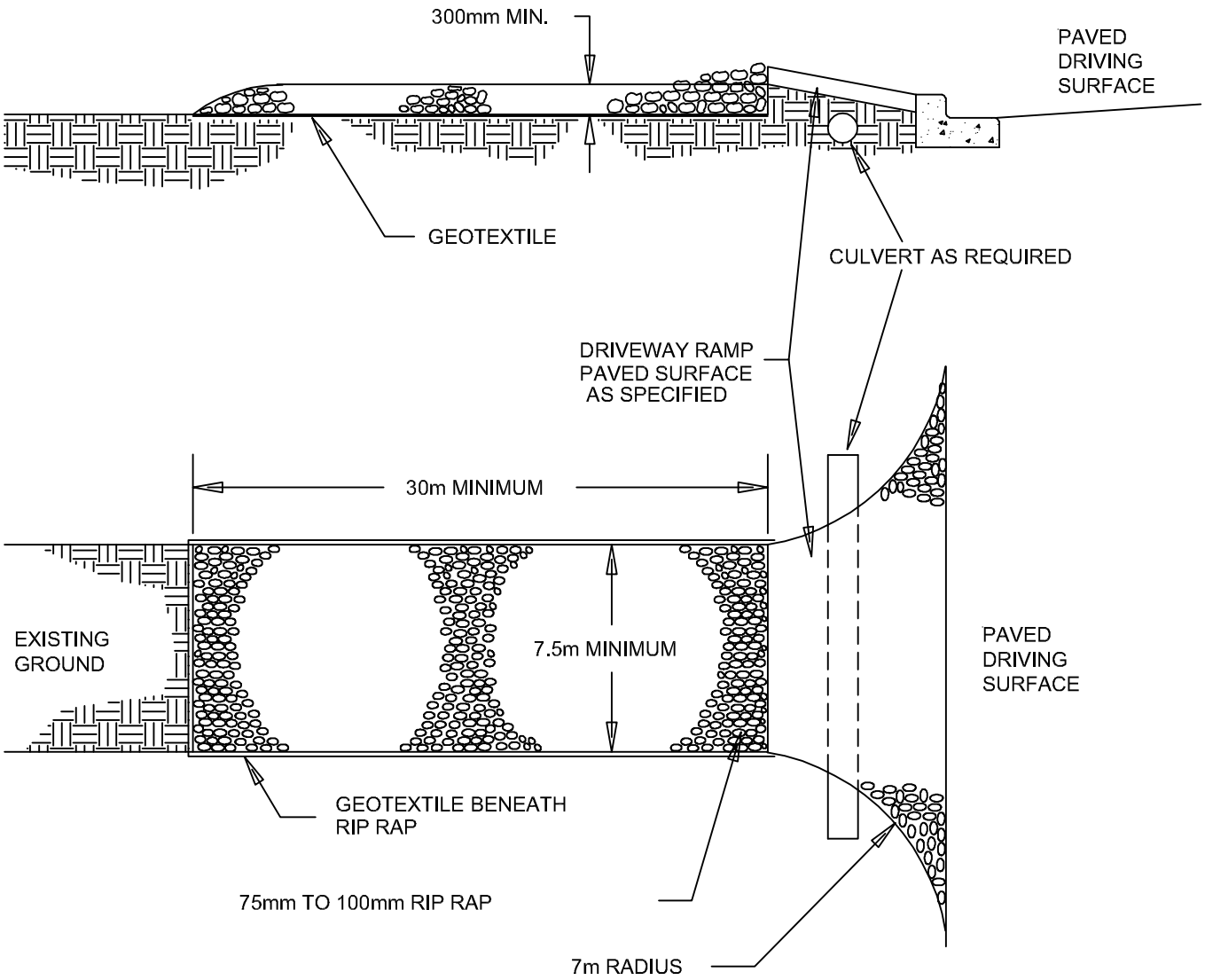

PLAN

NOTES:

1. PAD SHALL BE REMOVED AND REPLACED WHEN SOIL IS EVIDENT ON THE SURFACE OF THE PAD OR AS DIRECTED BY THE CITY ENGINEER.
2. PAD THICKNESS SHALL BE INCREASED IF SOIL CONDITIONS DICTATE OR PER THE DIRECTION OF THE CITY ENGINEER.
3. MINIMUM DIMENSIONS MAY BE MODIFIED AS REQUIRED BY SITE CONDITIONS UPON APPROVAL OF THE CITY ENGINEER.

TEMPORARY CONSTRUCTION ACCESS	Langley City THE PLACE TO BE	DRAWN Dec 2019
		REVISED
		SCALE N.T.S.
		SS-G05

SECTION

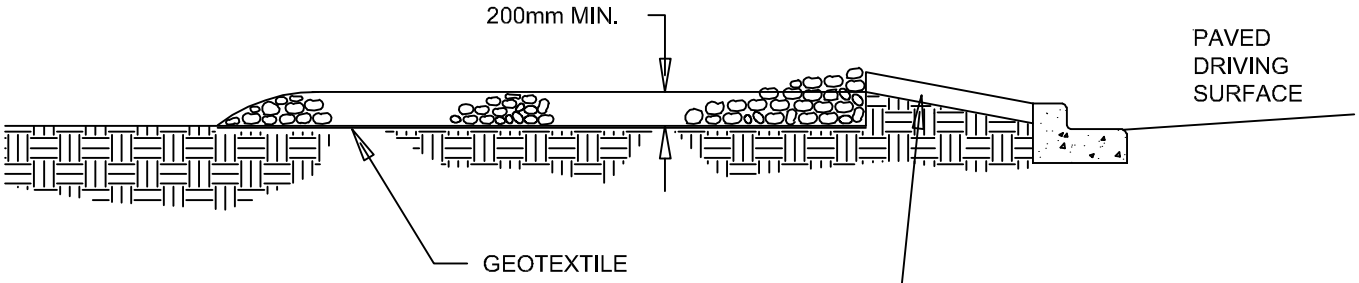

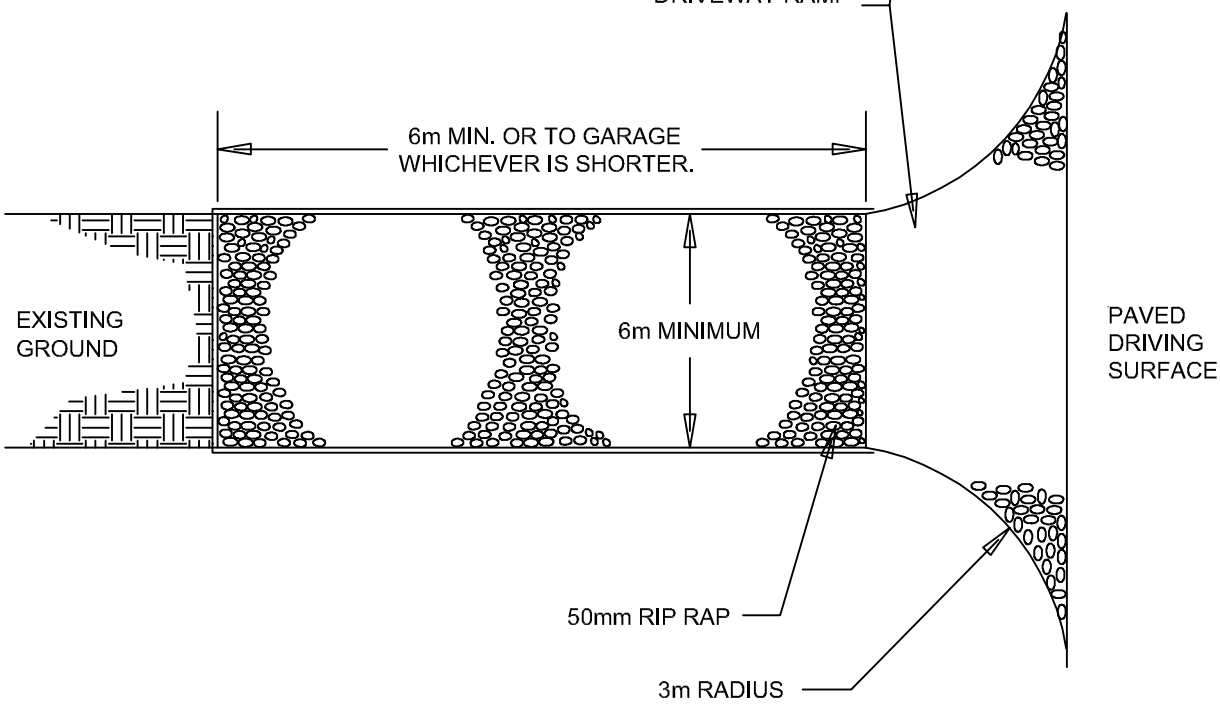

PLAN

NOTES:

1. PAD SHALL BE REMOVED AND REPLACED WHEN SOIL IS EVIDENT ON THE SURFACE OF THE PAD OR AS DIRECTED BY THE CITY ENGINEER.
2. PAD SHALL BE INSTALLED THROUGH PLANTING STRIP AS REQUIRED.
3. PAD THICKNESS SHALL BE INCREASED IF SOIL CONDITIONS DICTATE AND/OR PER THE DIRECTION OF THE CITY ENGINEER.
4. MINIMUM DIMENSIONS MAY BE MODIFIED AS REQUIRED BY SITE CONDITIONS UPON APPROVAL OF THE CITY ENGINEER.
5. ACCESS PAD FOR USE OF VEHICLES ONLY. NO BUILDING MATERIALS, GRAVEL, TOPSOIL OR OTHER MATERIALS SHALL BE STORED OR POSITIONED HERE.

TEMPORARY ACCESS PAD (SINGLE FAMILY RESIDENTIAL)	Langley City THE PLACE TO BE	DRAWN Dec 2019
		REVISED
		SCALE N.T.S.
		SS-G06

BROKEN ROCK RIPRAP SPECIFICATIONS

HEAVY RIPRAP

SI METRIC UNITS			IMPERIAL UNITS		
% BY WEIGHT FINER THAN	MASS (kg.)	APPROX. EQUIVALENT DIAMETER (mm)	% BY WEIGHT FINER THAN	MASS (lb.)	APPROX. EQUIVALENT DIAMETER (inches)
100	1100	900	100	2400	36
NOT MORE THAN 50	300	600	NOT MORE THAN 50	660	24
NOT MORE THAN 10	40	300	NOT MORE THAN 10	90	12

ROCK RIPRAP SHALL:

1. CONSIST OF DENSE, DURABLE, ROUGHLY EQUIDIMENSIONAL, ANGULAR PIECES.
2. BE CLEAN AND REASONABLY WELL GRADED COVERING THE COMPLETE ALLOWABLE SIZE RANGE FOR EVERY LOAD LEAVING THE QUARRY.
3. BE FREE FROM CRACKS, SEAMS, AND OTHER DEFECTS THAT WOULD TEND TO INCREASE UNDULY ITS DETERIORATION FROM NATURAL CAUSES.
4. BE FREE OF OBJECTIONABLE QUANTITIES OF DIRT, SAND, CLAY AND ROCK FINES.
5. BE SHAPED SUCH THAT NEITHER THE BREADTH NOR THICKNESS OF ANY INDIVIDUAL PIECE SHALL BE LESS THAN ONE THIRD OF ITS LENGTH. THIN, FLAT PIECES WILL NOT BE PERMITTED.

RIPRAP PLACEMENT:

1. ROCK RIPRAP SHALL BE PLACED IN SUCH A MANNER AS TO PRODUCE A REASONABLY WELL GRADED MASS OF ROCK WITH THE MINIMUM PRACTICABLE PERCENTAGE OF VOIDS.
2. NO ROCK SHALL PROTRUDE MORE THAN 300mm ABOVE THE LINES AND GRADES SHOWN.
3. THE FINISHED RIPRAP SHALL BE FREE FROM OBJECTIONABLE POCKETS OF SMALL STONES AND/OR CLUSTERS OF LARGER STONES.

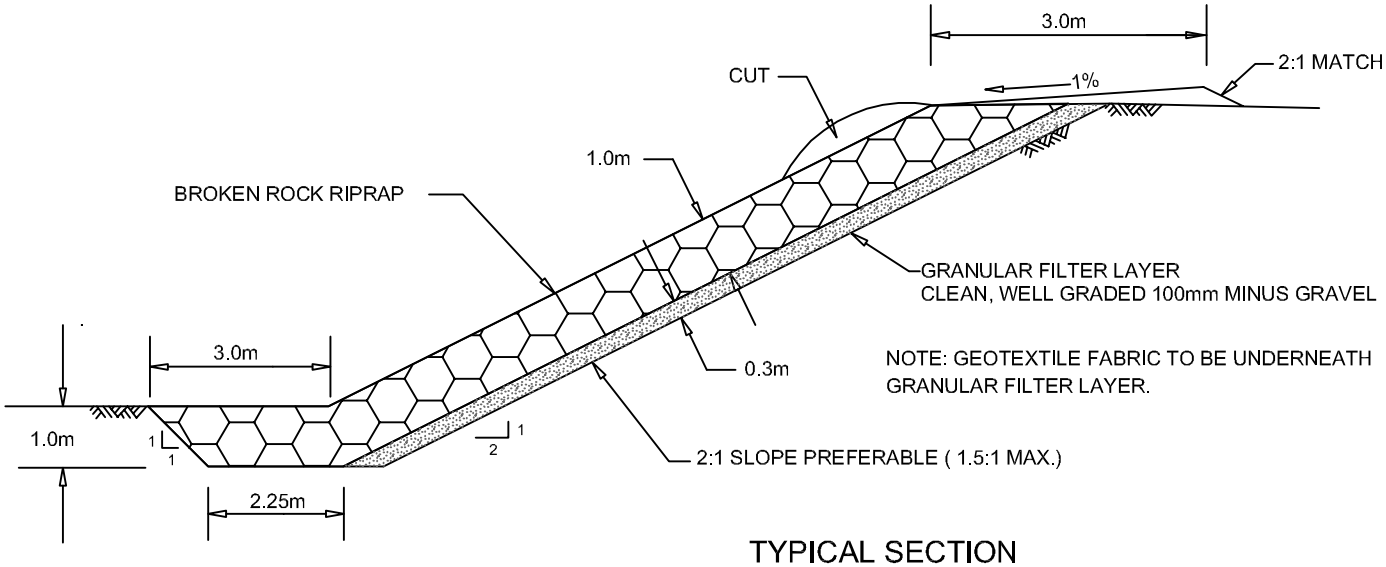

TYPICAL SECTION

BROKEN ROCK RIPRAP SPECIFICATIONS	Langley City THE PLACE TO BE	DRAWN Dec 2019
		REVISED
		SCALE N.T.S.
		SS-G07

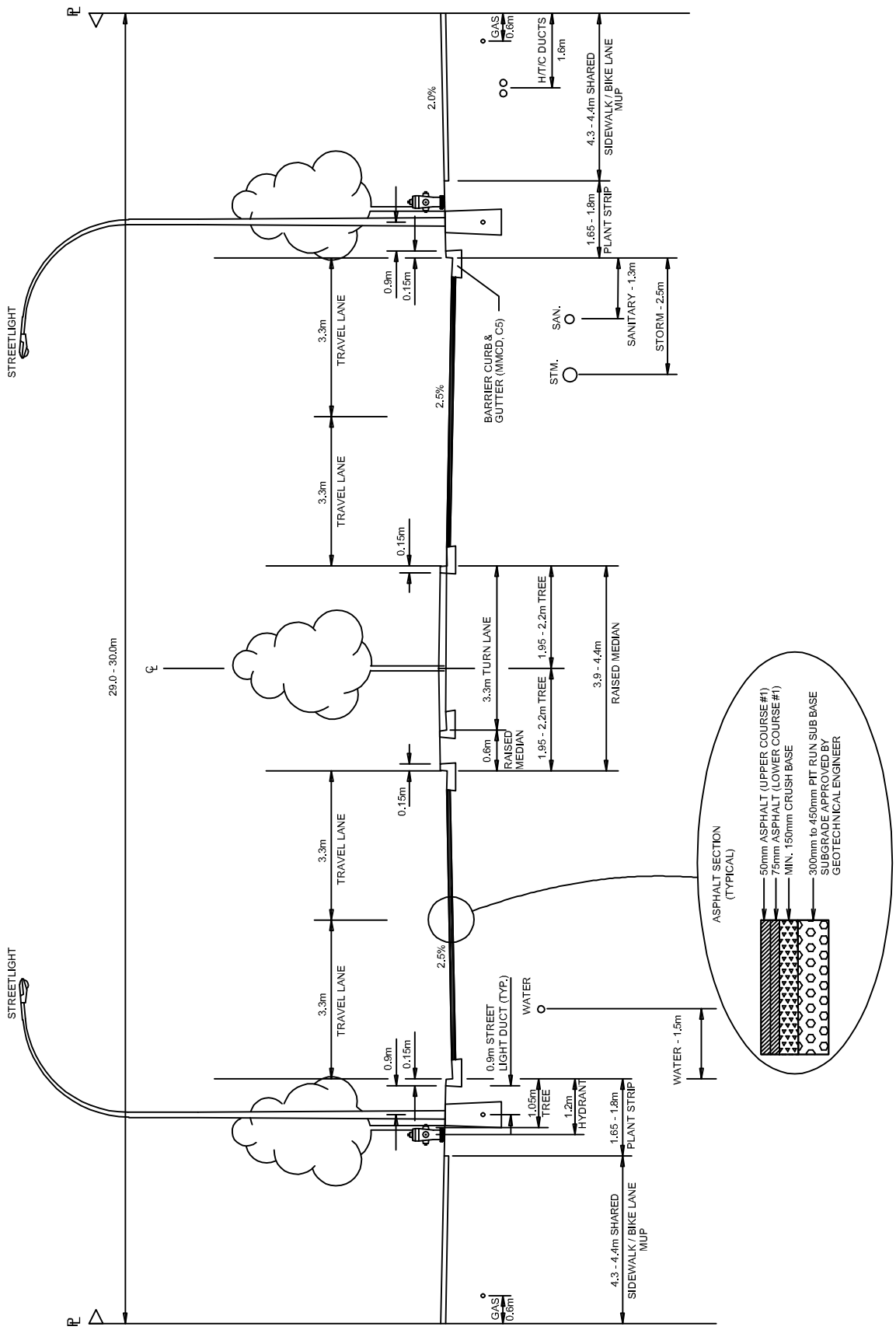

NOTES:

1. INCREASE CROSSFALL TO 3.25% WHEN LONGITUDINAL SLOPE EXCEEDS 5%
2. AT DISCRETION OF CITY ENGINEER, THIS DRAWING, (WITH SIDEWALK / BIKE LANE MUP), MAY NOT BE APPLICABLE WITHIN A 400m RADIUS OF A SKYTRAIN STATION.
3. THE CITY ENGINEER MAY REQUIRE MODIFICATIONS TO THIS CROSS SECTION TO MEET SITE-SPECIFIC SAFETY OBJECTIVES.
4. GAS LINE MAY REQUIRE SLEEVE WHEN IN PROXIMITY TO TRANSFORMER.

ARTERIAL ROAD (DIVIDED - WITH MULTI-USE PATH)

Langley City
THE PLACE TO BE

DRAWN	Jul 2021
REVISED	
SCALE	N.T.S.
	SS-R01

ARTERIAL ROAD (DIVIDED - WITH BUFFERED BIKE LANES)

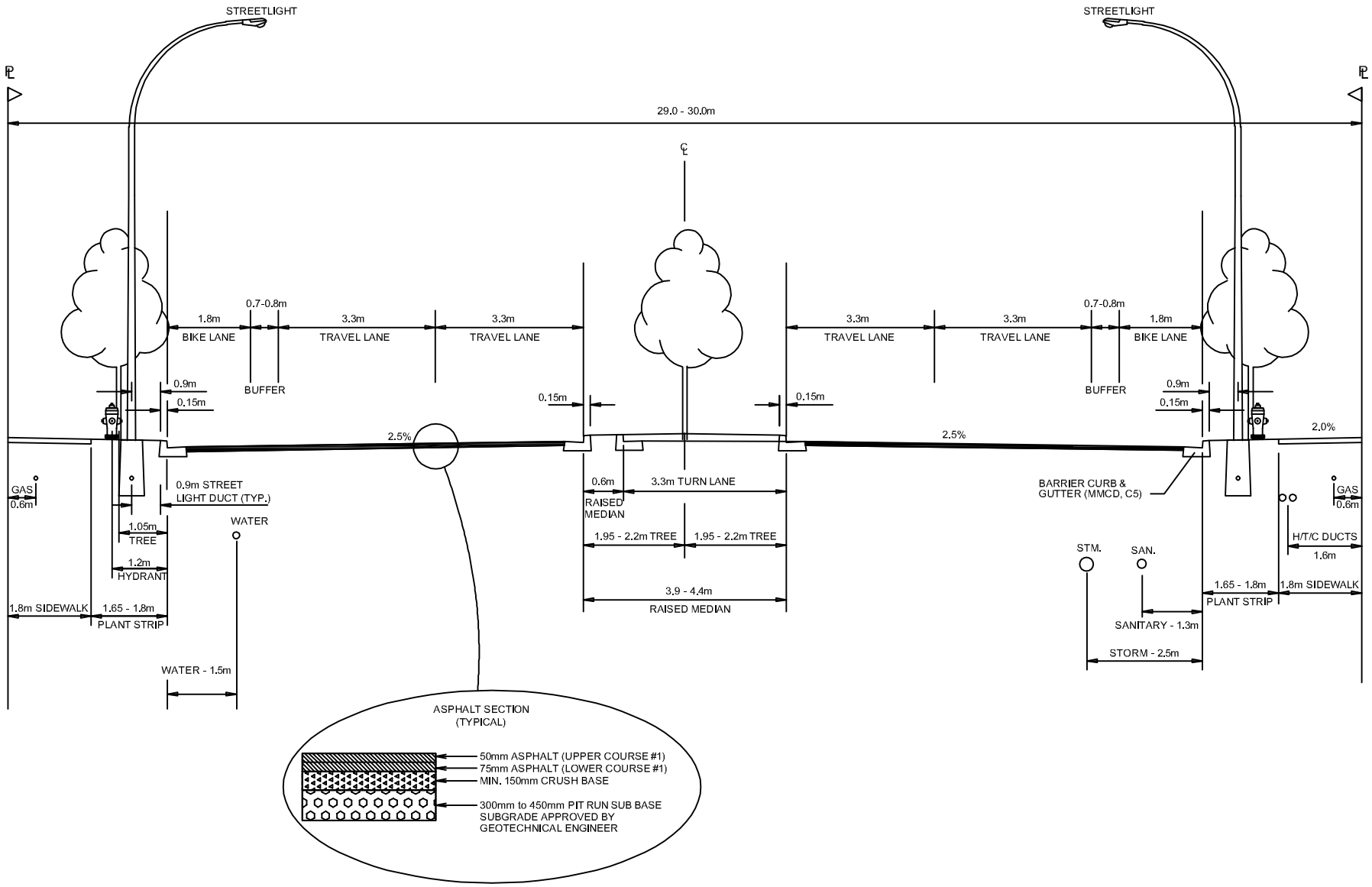

NOTES:

1. INCREASE CROSSFALL TO 3.25% WHEN LONGITUDINAL SLOPE EXCEEDS 5%.
2. CITY ENGINEER MAY REQUIRE AN ADDITIONAL SIDEWALK WIDTH OF 1.0m WITHIN A 200m RADIUS OF A SKYTRAIN STATION.
3. FOR PROTECTED BIKE LANES ADDITIONAL BUFFER AND NARROWER PLANT STRIPS/SIDEWALK MAY BE REQUIRED.
4. THE CITY ENGINEER MAY REQUIRE MODIFICATIONS TO THIS CROSS SECTION TO MEET SITE-SPECIFIC SAFETY OBJECTIVES.
5. GAS LINE MAY REQUIRE SLEEVE WHEN IN PROXIMITY TO TRANSFORMER.

Langley City
THE PLACE TO BE

DRAWN	Jul 2021
REVISED	
SCALE	N.T.S.

SS-R01A

ARTERIAL ROAD (DIVIDED - WITH RAISED BIKE LANES)

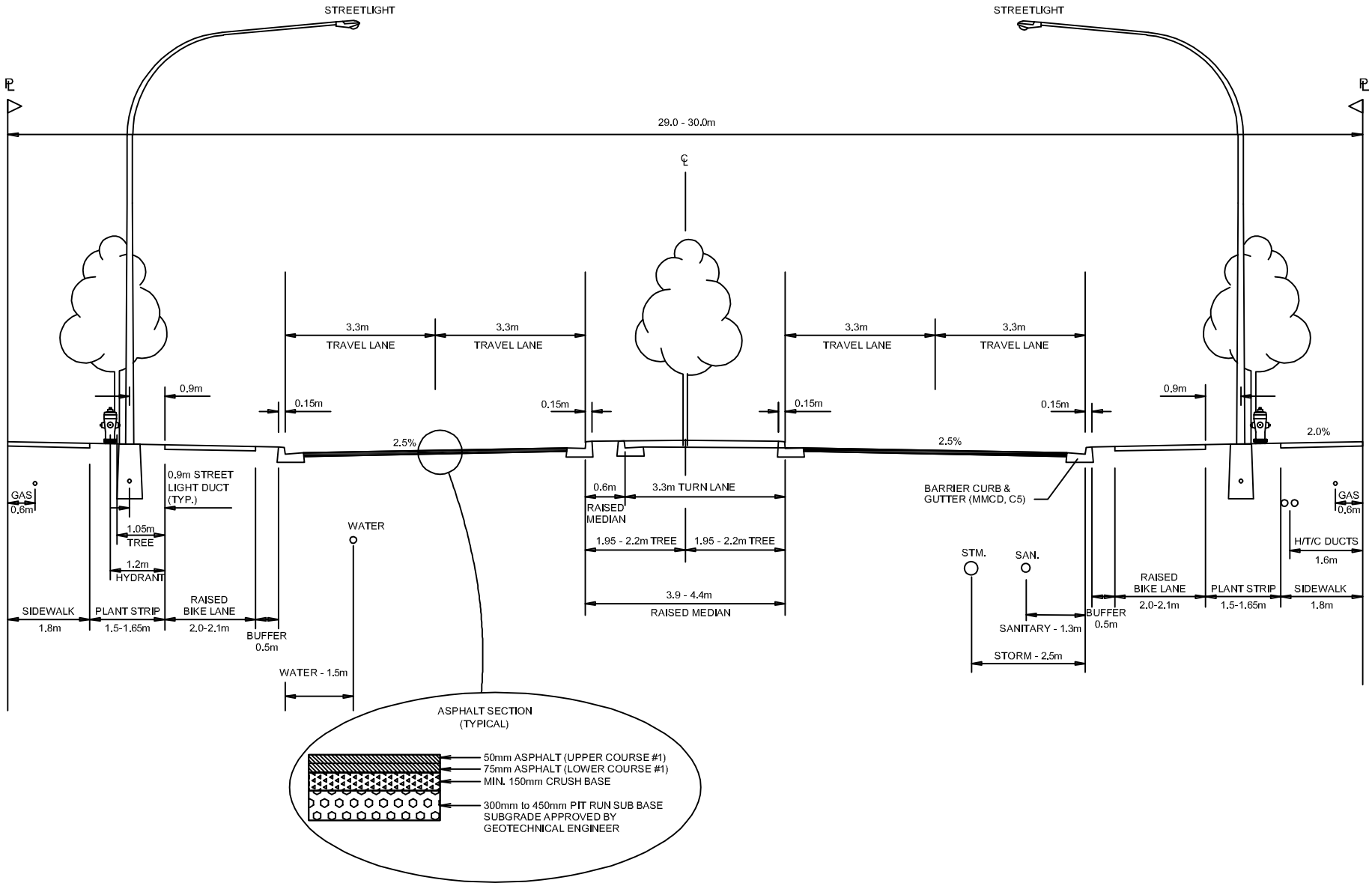

NOTES:

1. INCREASE CROSSFALL TO 3.25% WHEN LONGITUDINAL SLOPE EXCEEDS 5%
2. AT DISCRETION OF CITY ENGINEER, THIS DRAWING, (WITH SIDEWALK / BIKE LANE MUP), MAY NOT BE APPLICABLE WITHIN A 400m RADIUS OF A SKYTRAIN STATION.
3. THE CITY ENGINEER MAY REQUIRE MODIFICATIONS TO THIS CROSS SECTION TO MEET SITE-SPECIFIC SAFETY OBJECTIVES.
4. GAS LINE MAY REQUIRE SLEEVE WHEN IN PROXIMITY TO TRANSFORMER.

Langley City
THE PLACE TO BE

DRAWN	Jul 2021
REVISED	
SCALE	N.T.S.

SS-R01B

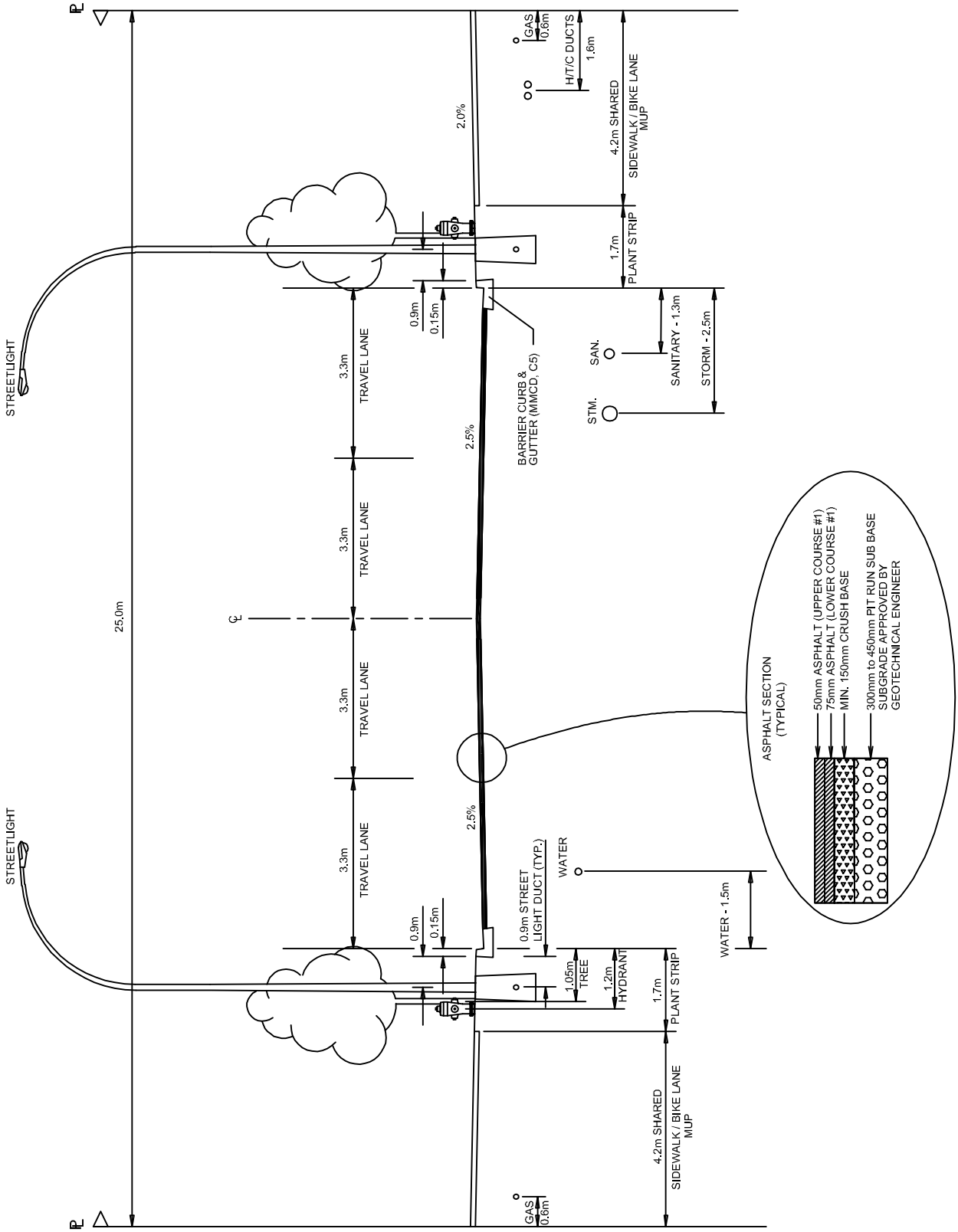

NOTES:

1. INCREASE CROSSFALL TO 3.25% WHEN LONGITUDINAL SLOPE EXCEEDS 5%
2. AT DISCRETION OF CITY ENGINEER, THIS DRAWING, (WITH SIDEWALK / BIKE LANE MUP), MAY NOT BE APPLICABLE WITHIN A 400m RADIUS OF A SKYTRAIN STATION.
3. THE CITY ENGINEER MAY REQUIRE MODIFICATIONS TO THIS CROSS SECTION TO MEET SITE-SPECIFIC SAFETY OBJECTIVES.
4. GAS LINE MAY REQUIRE SLEEVE WHEN IN PROXIMITY TO TRANSFORMER.

ARTERIAL ROAD (UNDIVIDED - WITH MULTI-USE PATH)

Langley City
THE PLACE TO BE

DRAWN	Jul 2021
REVISED	
SCALE	N.T.S.
	SS-R02

ARTERIAL ROAD
(UNDIVIDED - WITH BUFFERED BIKE LANES)

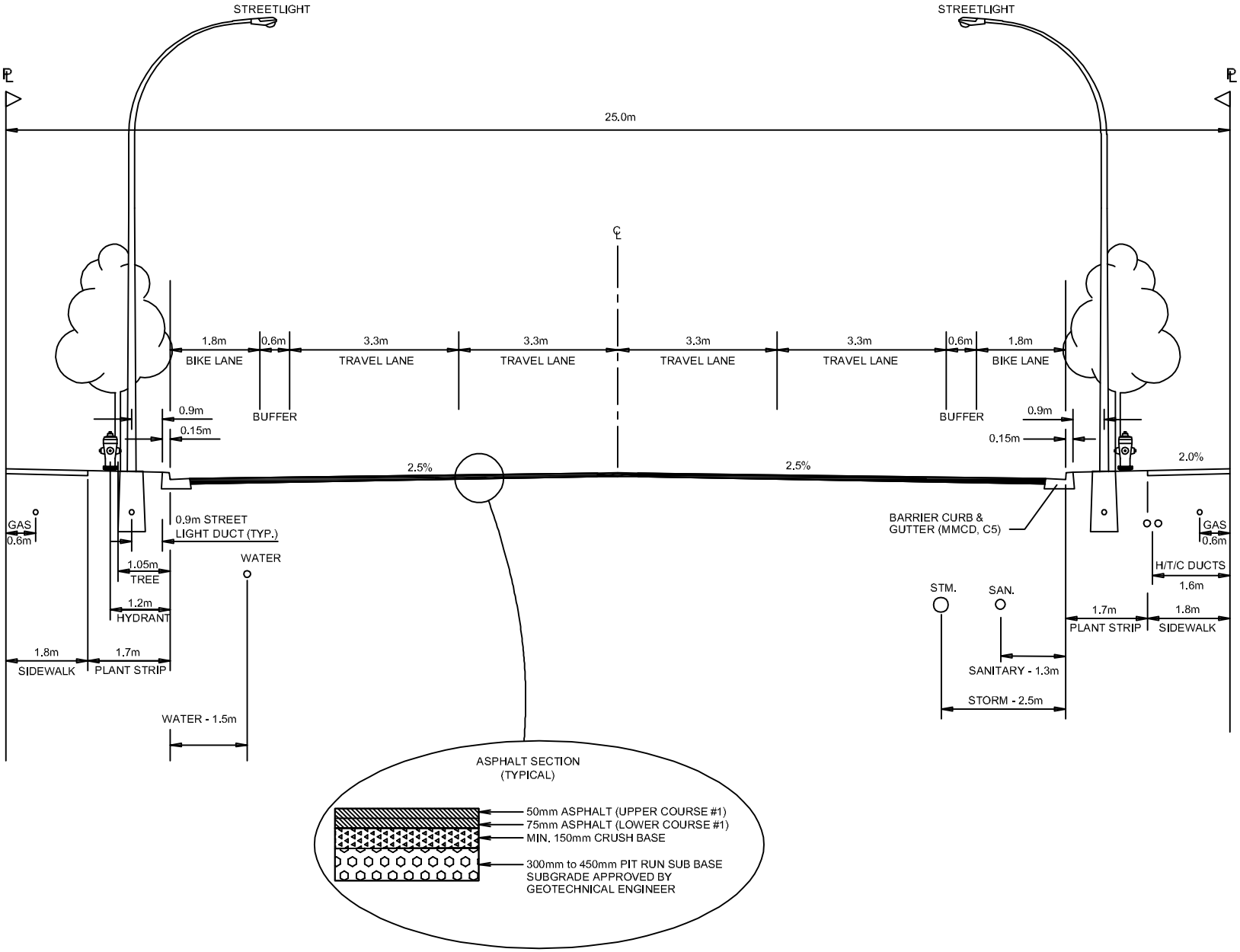

NOTES:

1. INCREASE CROSSFALL TO 3.25% WHEN LONGITUDINAL SLOPE EXCEEDS 5%.
2. CITY ENGINEER MAY REQUIRE AN ADDITIONAL SIDEWALK WIDTH OF 1.0m WITHIN A 200m RADIUS OF A SKYTRAIN STATION.
3. FOR PROTECTED BIKE LANES ADDITIONAL BUFFER AND NARROWER PLANT STRIPS/SIDEWALKS MAY BE REQUIRED.
4. THE CITY ENGINEER MAY REQUIRE MODIFICATIONS TO THIS CROSS SECTION TO MEET SITE-SPECIFIC SAFETY OBJECTIVES.
5. GAS LINE MAY REQUIRE SLEEVE WHEN IN PROXIMITY TO TRANSFORMER.

Langley City
THE PLACE TO BE

DRAWN	Jul 2021
REVISED	
SCALE	N.T.S.

SS-R02A

ARTERIAL ROAD (UNDIVIDED - WITH RAISED BIKE LANES)

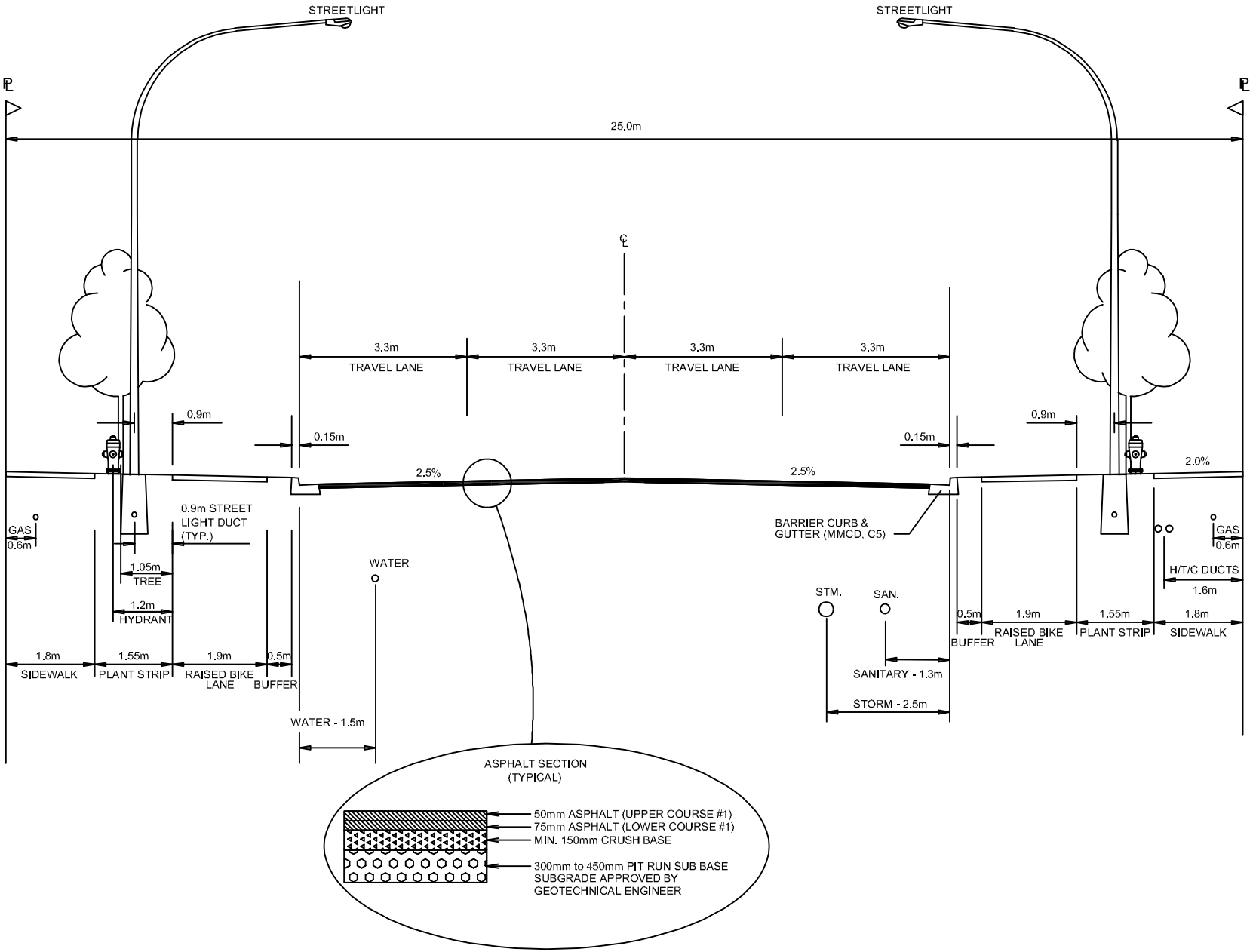

NOTES:

1. INCREASE CROSSFALL TO 3.25% WHEN LONGITUDINAL SLOPE EXCEEDS 5%
2. AT DISCRETION OF CITY ENGINEER, THIS DRAWING, (WITH SIDEWALK / BIKE LANE MUP), MAY NOT BE APPLICABLE WITHIN A 400m RADIUS OF A SKYTRAIN STATION.
3. THE CITY ENGINEER MAY REQUIRE MODIFICATIONS TO THIS CROSS SECTION TO MEET SITE-SPECIFIC SAFETY OBJECTIVES.
4. GAS LINE MAY REQUIRE SLEEVE WHEN IN PROXIMITY TO TRANSFORMER.

Langley City
THE PLACE TO BE

DRAWN	Jul 2021
REVISED	
SCALE	N.T.S.

SS-R02B

COLLECTOR ROAD (DIVIDED - WITH MULTI-USE PATH)

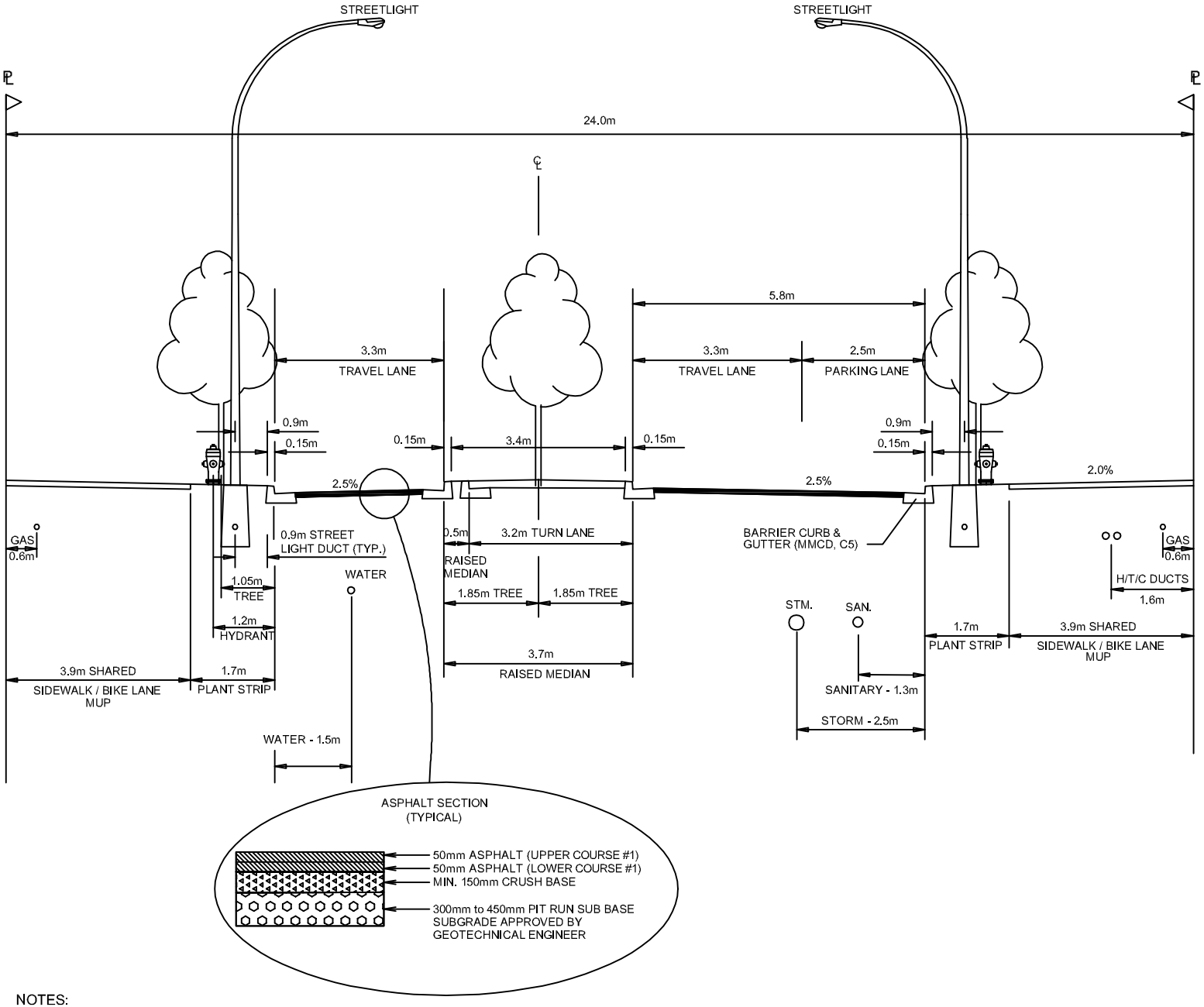

NOTES:

1. INCREASE CROSSFALL TO 3.25% WHEN LONGITUDINAL SLOPE EXCEEDS 5%
2. AT DISCRETION OF CITY ENGINEER, THIS DRAWING, (WITH SIDEWALK / BIKE LANE MUP), MAY NOT BE APPLICABLE WITHIN A 400m RADIUS OF A SKYTRAIN STATION.
3. THE CITY ENGINEER MAY REQUIRE MODIFICATIONS TO THIS CROSS SECTION TO MEET SITE-SPECIFIC SAFETY OBJECTIVES.
4. GAS LINE MAY REQUIRE SLEEVE WHEN IN PROXIMITY TO TRANSFORMER.

Langley City
THE PLACE TO BE

DRAWN	Jul 2021
REVISED	
SCALE	N.T.S.

SS-R03

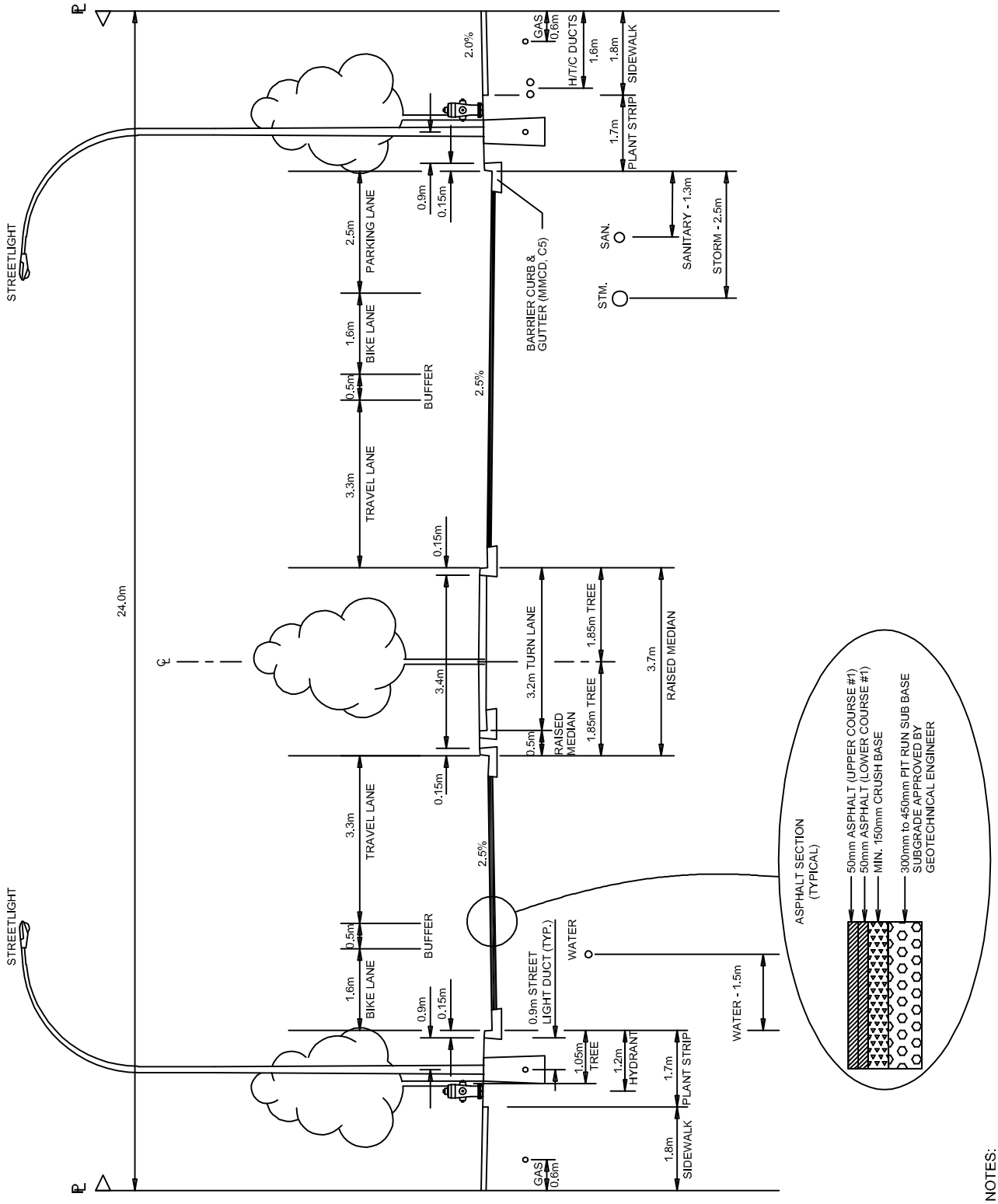

NOTES:

1. INCREASE CROSSFALL TO 3.25% WHEN LONGITUDINAL SLOPE EXCEEDS 5%
2. CITY ENGINEER MAY REQUIRE AN ADDITIONAL SIDEWALK WIDTH OF 1.0m WITHIN A 200m RADIUS OF A SKYTRAIN STATION.
3. FOR PROTECTED BIKE LANES ADDITIONAL BUFFER AND NARROWER PLANT STRIPS/SIDEWALKS MAY BE REQUIRED.
4. THE CITY ENGINEER MAY REQUIRE MODIFICATIONS TO THIS CROSS SECTION TO MEET SITE-SPECIFIC SAFETY OBJECTIVES.
5. GAS LINE MAY REQUIRE SLEEVE WHEN IN PROXIMITY TO TRANSFORMER.

COLLECTOR ROAD (DIVIDED - WITH BUFFERED BIKE LANES)

Langley City
THE PLACE TO BE

DRAWN	Jul 2021
REVISED	
SCALE	N.T.S.
	SS-R03A

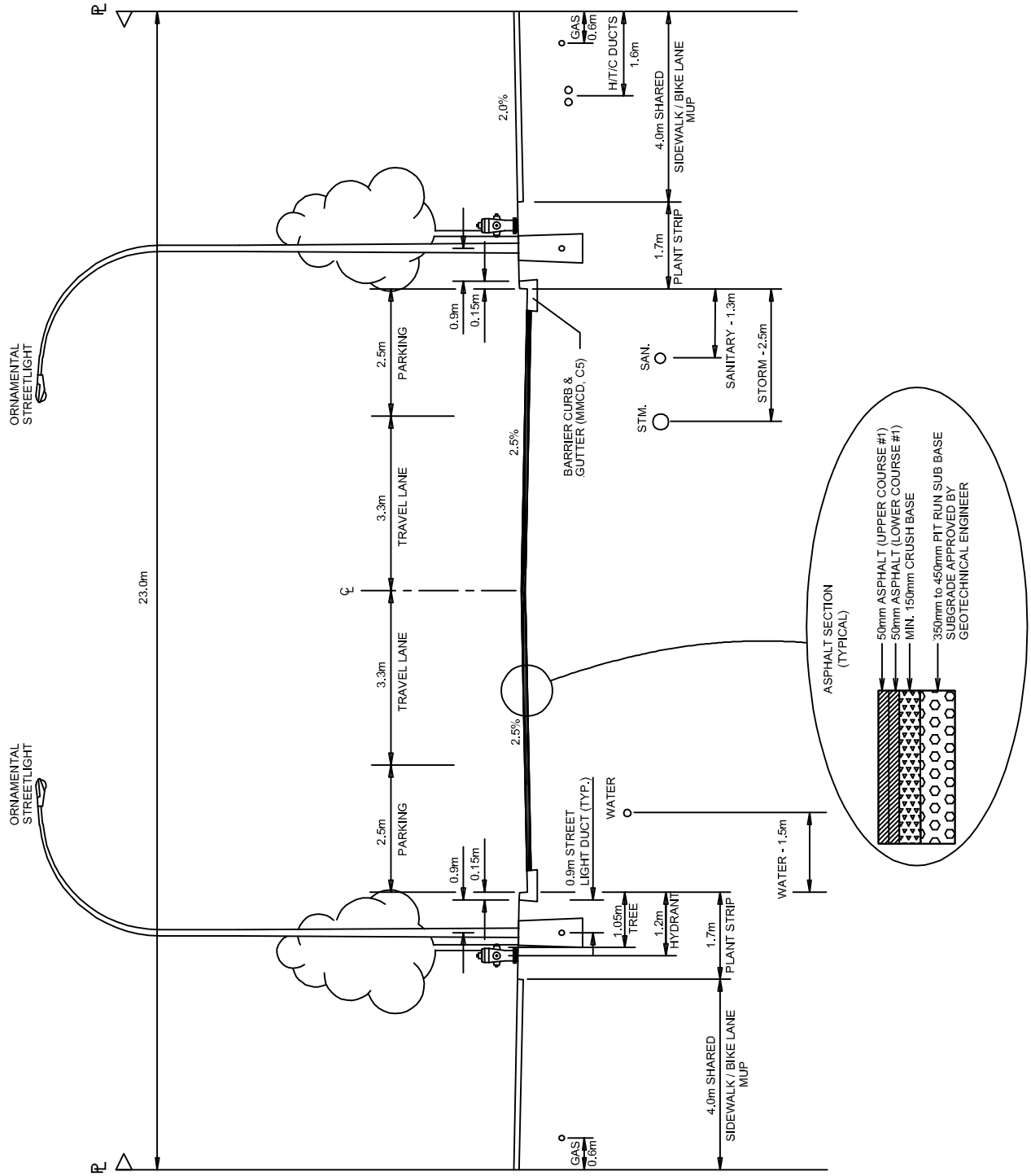

NOTES:

1. INCREASE CROSSFALL TO 3.25% WHEN LONGITUDINAL SLOPE EXCEEDS 5%
2. AT DISCRETION OF CITY ENGINEER, THIS DRAWING, (WITH SIDEWALK / BIKE LANE MUP), MAY NOT BE APPLICABLE WITHIN A 400m RADIUS OF A SKYTRAIN STATION.
3. THE CITY ENGINEER MAY REQUIRE MODIFICATIONS TO THIS CROSS SECTION TO MEET SITE-SPECIFIC SAFETY OBJECTIVES.
4. GAS LINE MAY REQUIRE SLEEVE WHEN IN PROXIMITY TO TRANSFORMER.

COLLECTOR ROAD (UNDIVIDED - WITH MULTI-USE PATH)

Langley City
THE PLACE TO BE

DRAWN	Jul 2021
REVISED	
SCALE	N.T.S.
	SS-R04

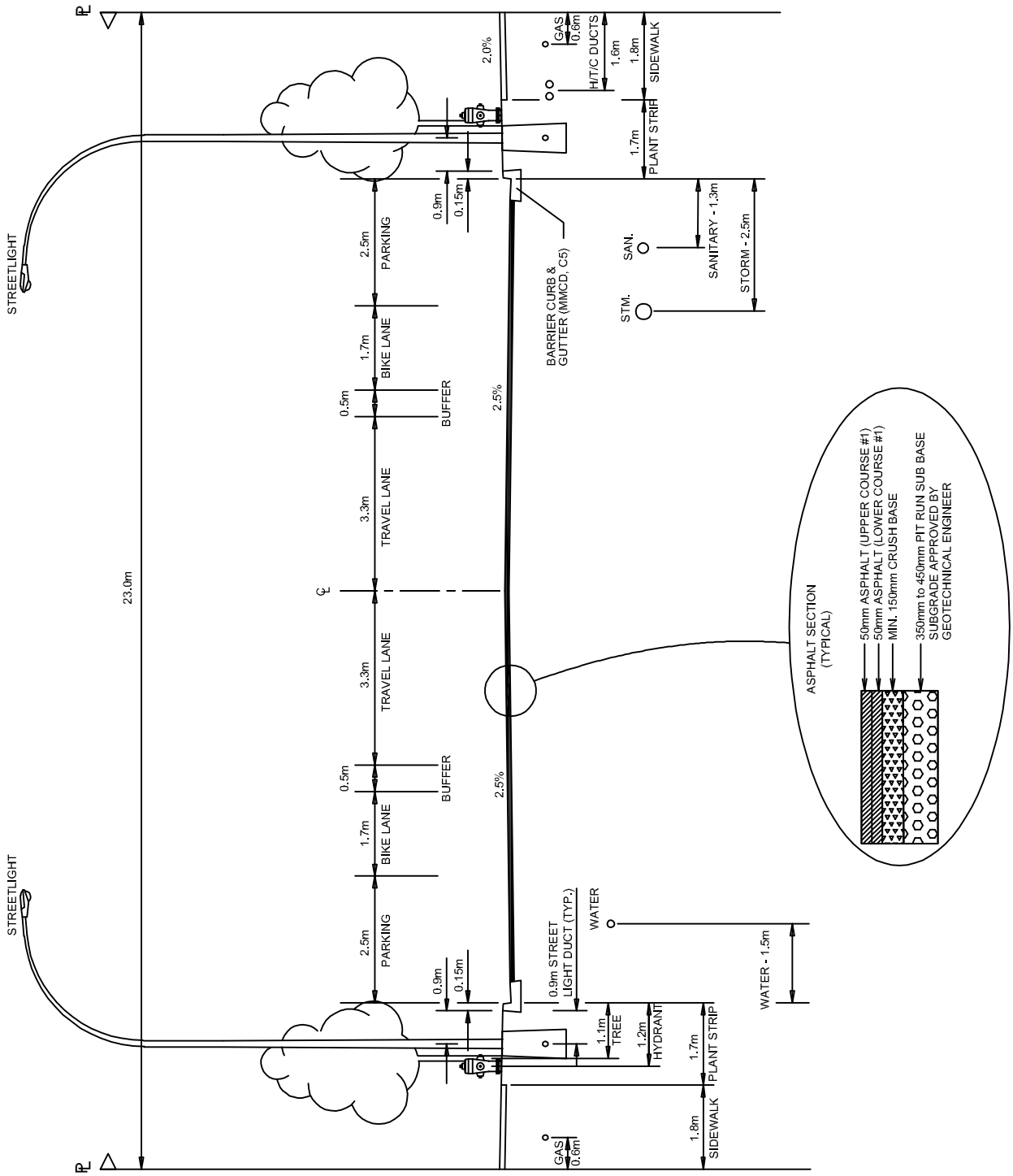

NOTES:

1. INCREASE CROSSFALL TO 3.25% WHEN LONGITUDINAL SLOPE EXCEEDS 5%.
2. CITY ENGINEER MAY REQUIRE AN ADDITIONAL SIDEWALK WIDTH OF 1.0m WITHIN A 200m RADIUS OF A SKYTRAIN STATION.
3. FOR PROTECTED BIKE LANES ADDITIONAL BUFFER AND NARROWER PLANT STRIPS/SIDEWALKS MAY BE REQUIRED.
4. THE CITY ENGINEER MAY REQUIRE MODIFICATIONS TO THIS CROSS SECTION TO MEET SITE-SPECIFIC SAFETY OBJECTIVES.
5. GAS LINE MAY REQUIRE SLEEVE WHEN IN PROXIMITY TO TRANSFORMER.

COLLECTOR ROAD (UNDIVIDED - WITH BUFFERED BIKE LANES)

Langley City
THE PLACE TO BE

DRAWN	Jul 2021
REVISED	
SCALE	N.T.S.
	SS-R04A

COLLECTOR ROAD (UNDIVIDED - TWO WAY BIKE LANE)

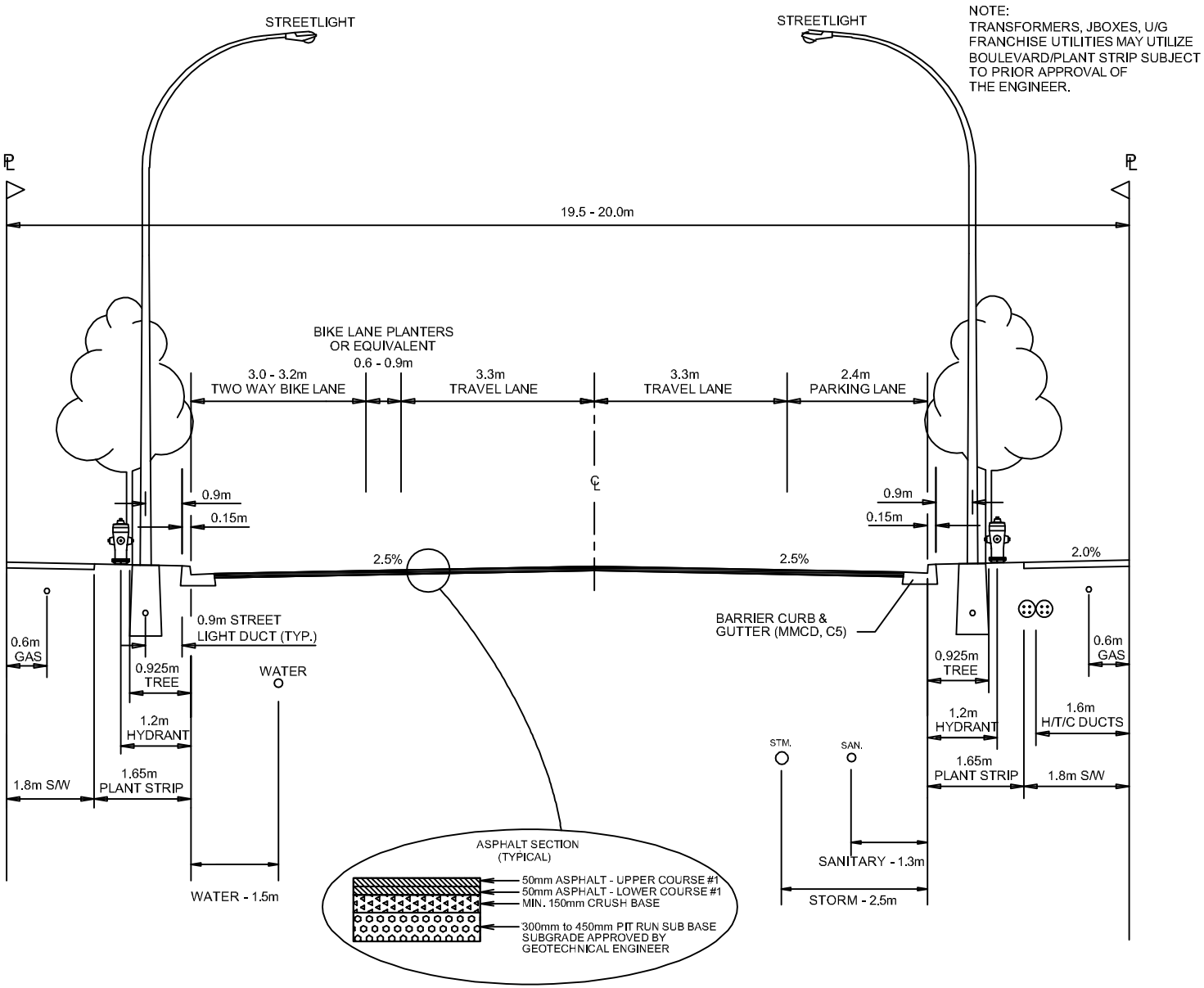

NOTES:

1. INCREASE CROSSFALL TO 3.25% WHEN LONGITUDINAL SLOPE EXCEEDS 5%.
2. CITY ENGINEER MAY REQUIRE AN ADDITIONAL SIDEWALK WIDTH OF 1.0m WITHIN A 200m RADIUS OF A SKYTRAIN STATION.
3. FOR PROTECTED BIKE LANES ADDITIONAL BUFFER AND NARROWER PLANT STRIPS/SIDEWALK MAY BE REQUIRED.
4. THE CITY ENGINEER MAY REQUIRE MODIFICATIONS TO THIS CROSS SECTION TO MEET SITE-SPECIFIC SAFETY OBJECTIVES.
5. GAS LINE MAY REQUIRE SLEEVE WHEN IN PROXIMITY TO TRANSFORMER.

Langley City
THE PLACE TO BE

DRAWN	Jul 2021
REVISED	
SCALE	N.T.S.

SS-R05

COLLECTOR ROAD
(UNDIVIDED - SHARED USE)

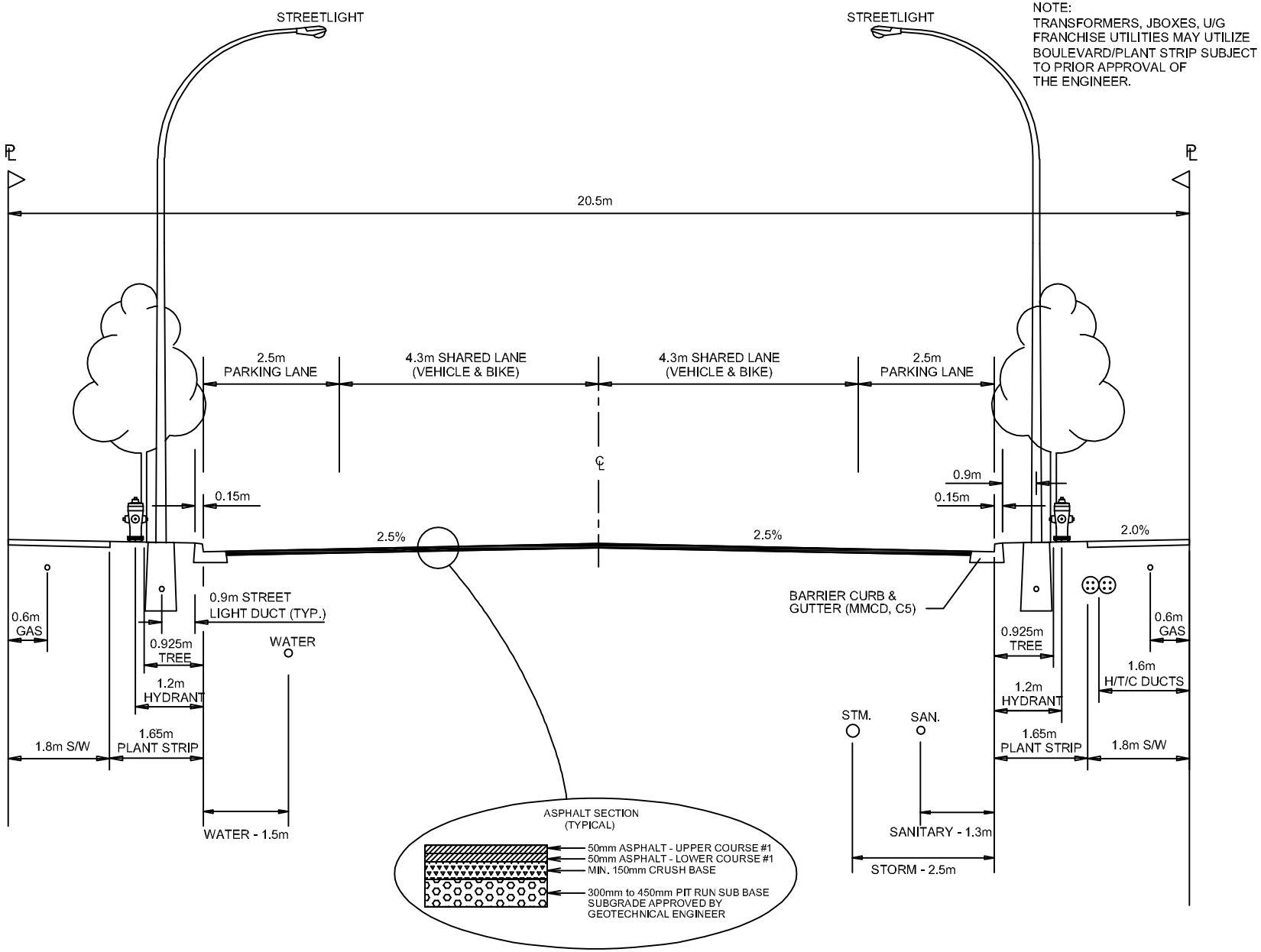

NOTES:

1. INCREASE CROSSFALL TO 3.25% WHEN LONGITUDINAL SLOPE EXCEEDS 5%.
2. CITY ENGINEER MAY REQUIRE AN ADDITIONAL SIDEWALK WIDTH OF 1.0m WITHIN A 200m RADIUS OF A SKYTRAIN STATION.
3. THE CITY ENGINEER MAY REQUIRE MODIFICATIONS TO THIS CROSS SECTION TO MEET SITE-SPECIFIC SAFETY OBJECTIVES.
4. GAS LINE MAY REQUIRE SLEEVE WHEN IN PROXIMITY TO TRANSFORMER.

Langley City
THE PLACE TO BE

DRAWN	Jul 2021
REVISED	
SCALE	N.T.S.

SS-R06

LOCAL RESIDENTIAL ROAD

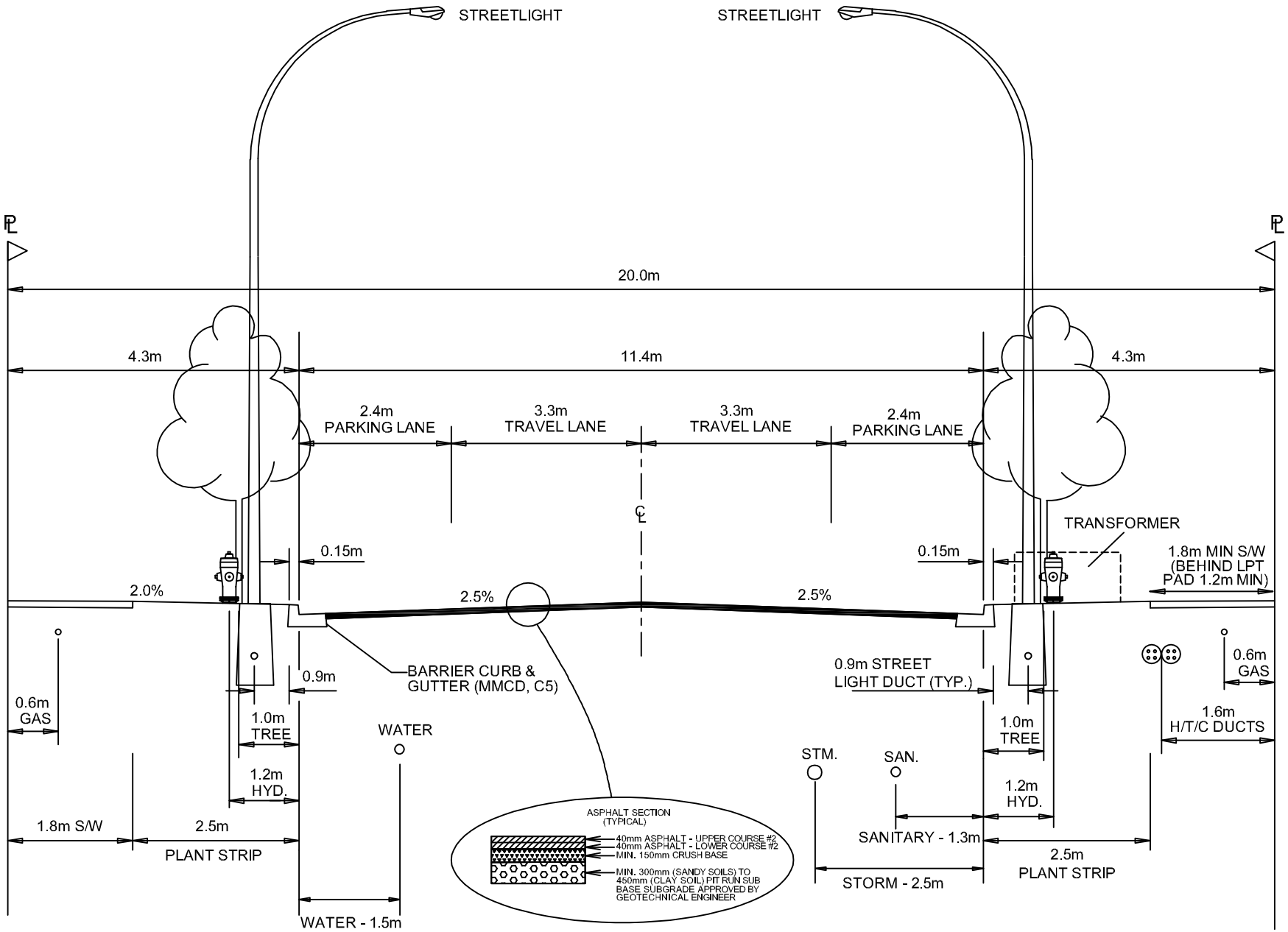

NOTES:

1. INCREASE CROSSFALL TO 3.25% WHEN LONGITUDINAL SLOPE EXCEEDS 5%
2. THE CITY ENGINEER MAY REQUIRE MODIFICATIONS TO THIS CROSS SECTION TO MEET SITE-SPECIFIC SAFETY OBJECTIVES.

Langley City
THE PLACE TO BE

DRAWN	May 2021
REVISED	
SCALE	N.T.S.

SS-R07

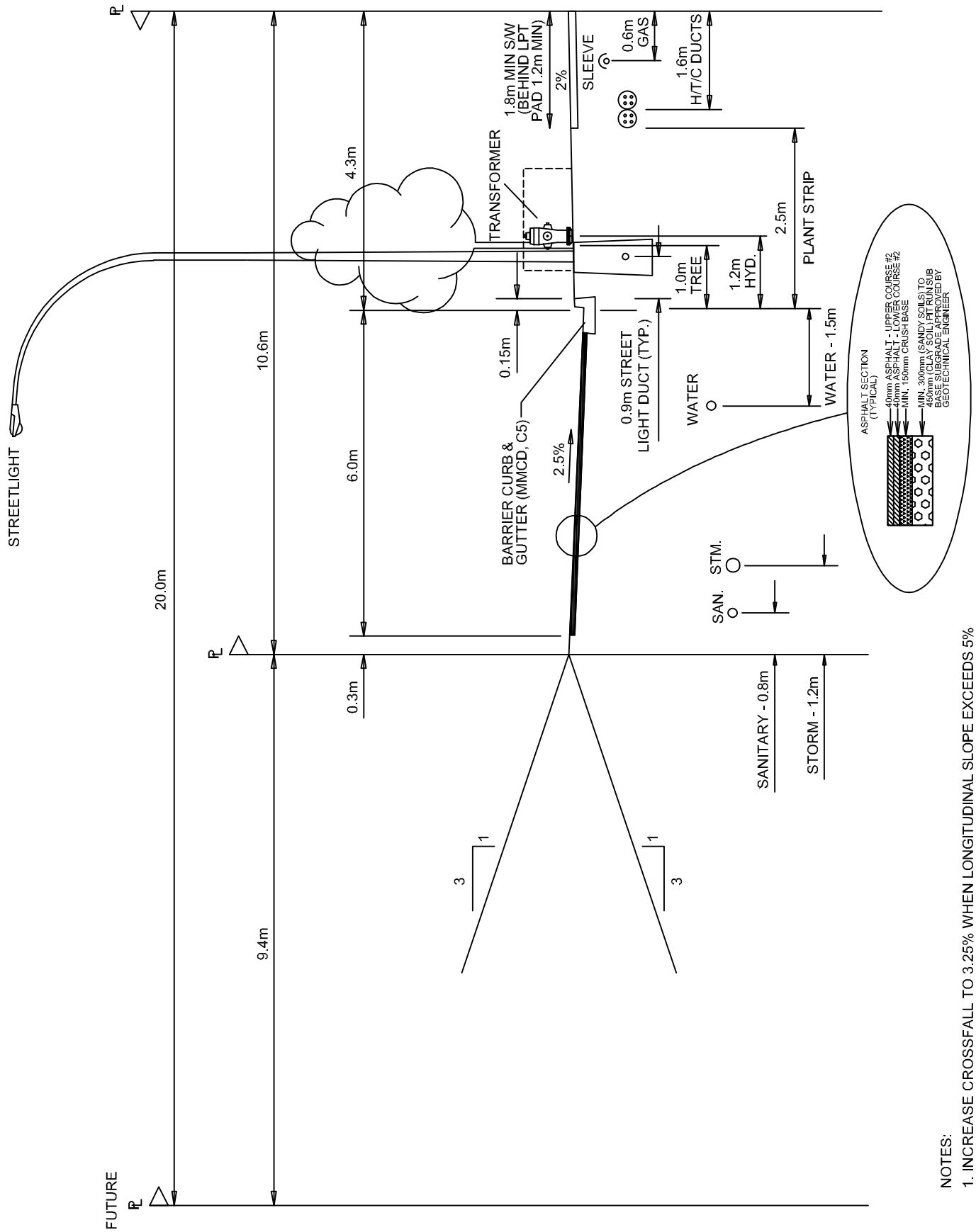

NOTES:
1. INCREASE CROSSFALL TO 3.25% WHEN LONGITUDINAL SLOPE EXCEEDS 5%
2. THE CITY ENGINEER MAY REQUIRE MODIFICATIONS TO THIS CROSS SECTION TO MEET SITE-SPECIFIC SAFETY OBJECTIVES.

TYPICAL INITIAL 1/2 ROAD SECTION
LOCAL RESIDENTIAL ROAD

Langley City
THE PLACE TO BE

DRAWN	May 2021
REVISED	
SCALE	N.T.S.
	SS-R07A

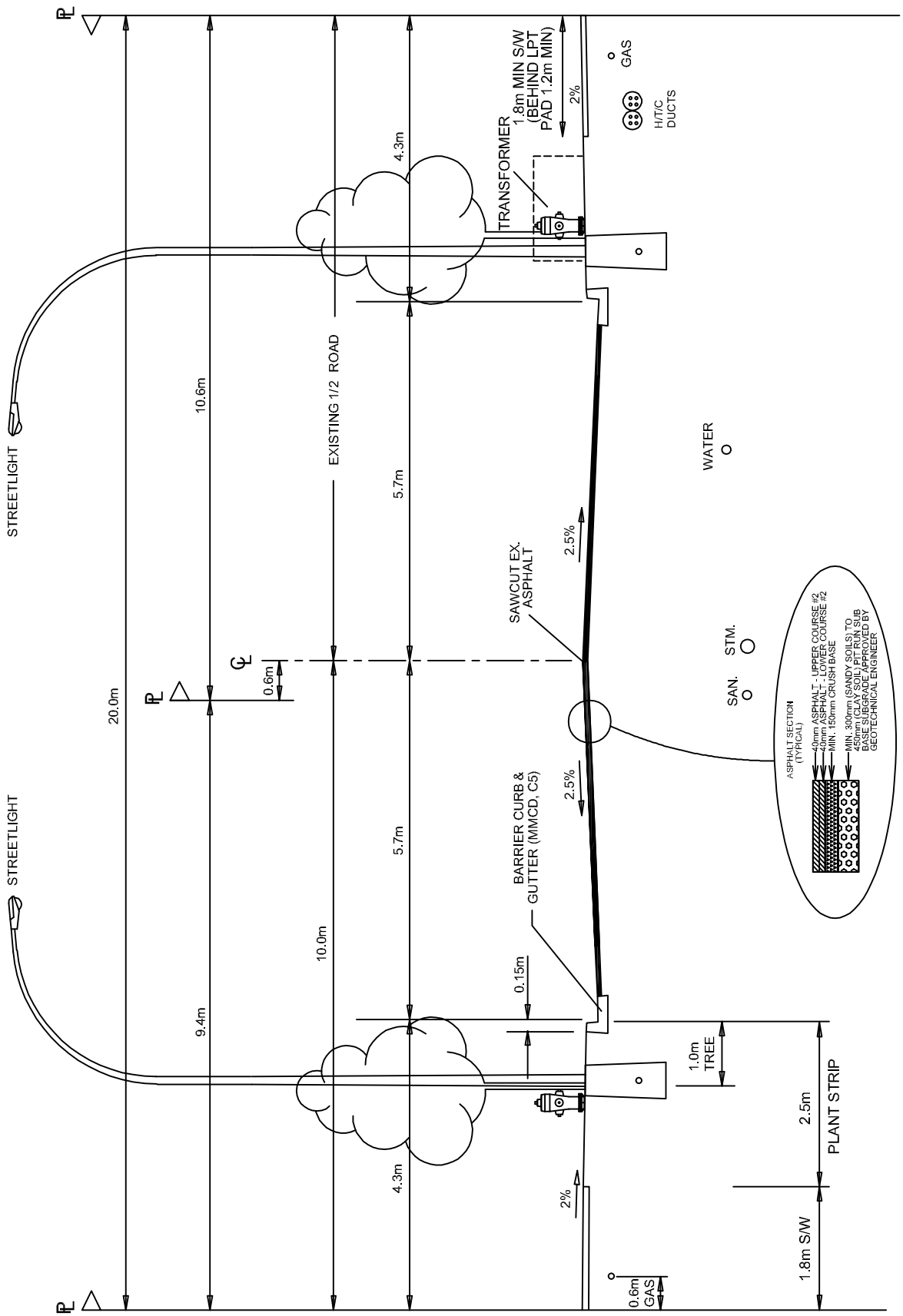

NOTES:
1. INCREASE CROSSFALL TO 3.25% WHEN LONGITUDINAL SLOPE EXCEEDS 5%
2. THE CITY ENGINEER MAY REQUIRE MODIFICATIONS TO THIS CROSS SECTION TO MEET SITE-SPECIFIC SAFETY OBJECTIVES.

TYPICAL REMAINING 1/2 ROAD SECTION LOCAL RESIDENTIAL ROAD

Langley City
THE PLACE TO BE

DRAWN	May 2021
REVISED	
SCALE	N.T.S.
	SS-R07B

LOCAL RESIDENTIAL ROAD (NON-BUS ROUTES)

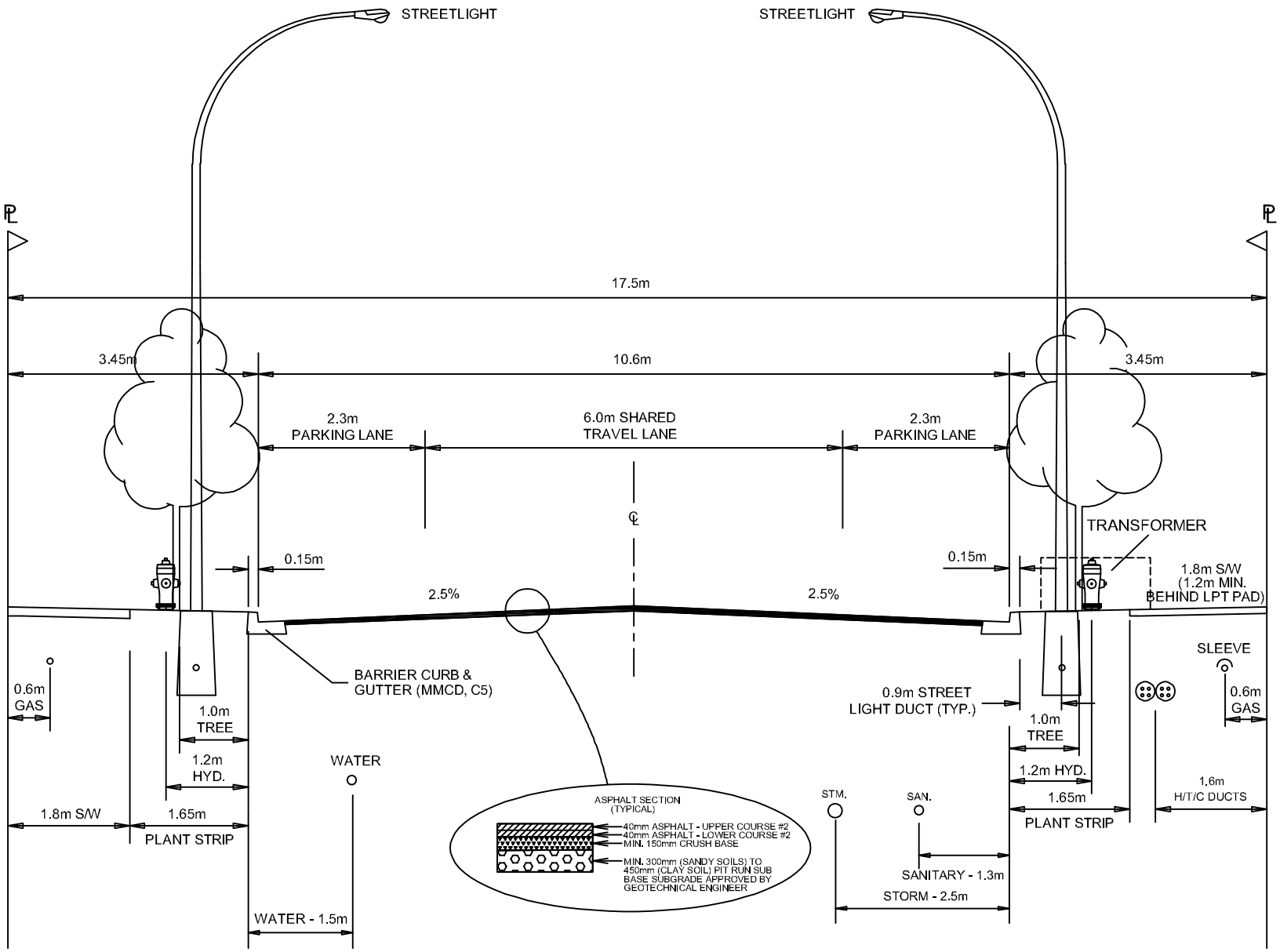

NOTES:
1. INCREASE CROSSFALL TO 3.25% WHEN LONGITUDINAL SLOPE EXCEEDS 5%
2. THE CITY ENGINEER MAY REQUIRE MODIFICATIONS TO THIS CROSS SECTION TO MEET SITE-SPECIFIC SAFETY OBJECTIVES.

Langley City
THE PLACE TO BE

DRAWN	May 2021
REVISED	
SCALE	N.T.S.

SS-R08

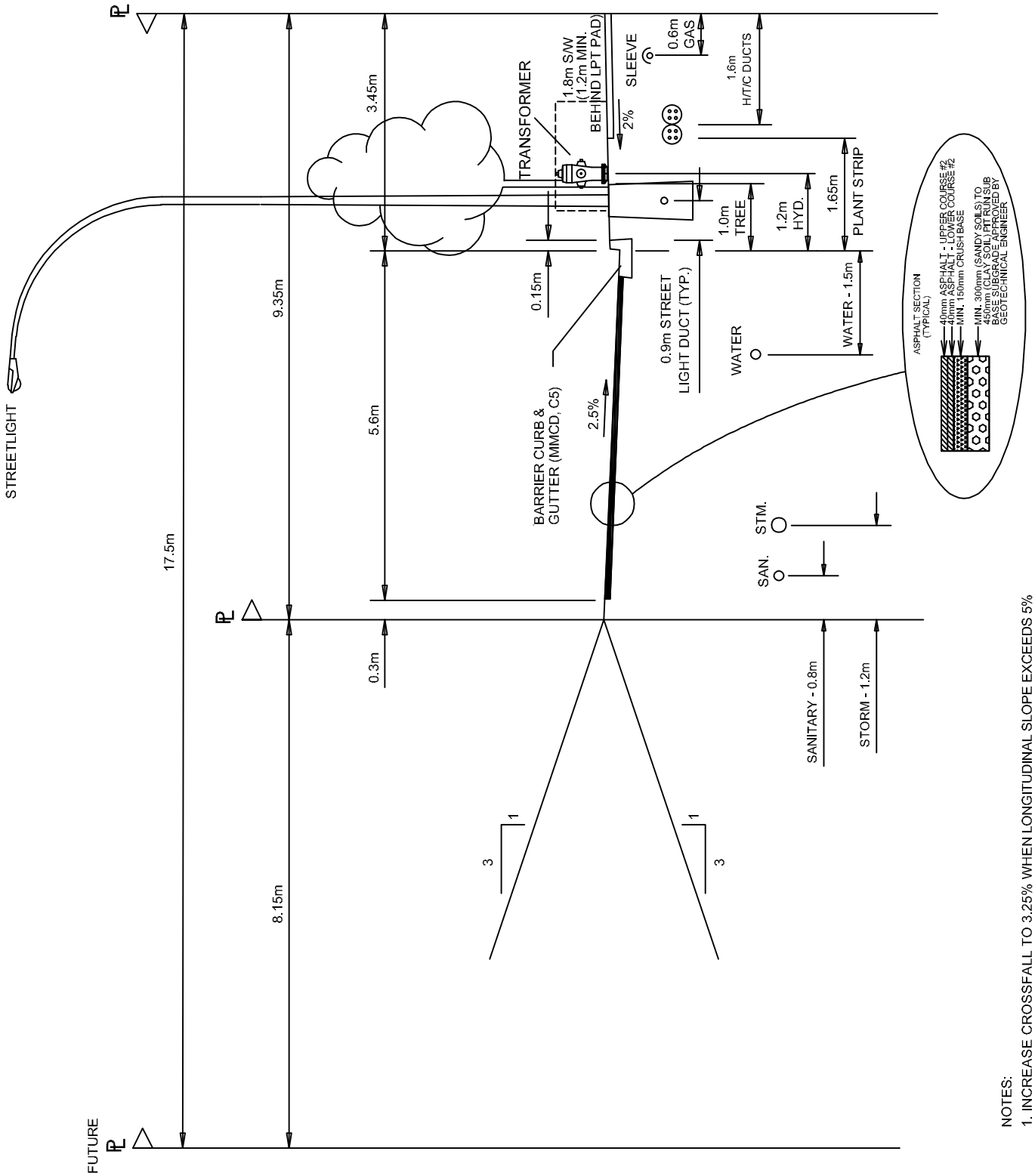

NOTES:
1. INCREASE CROSSFALL TO 3.25% WHEN LONGITUDINAL SLOPE EXCEEDS 5%
2. THE CITY ENGINEER MAY REQUIRE MODIFICATIONS TO THIS CROSS SECTION TO MEET SITE-SPECIFIC SAFETY OBJECTIVES.

TYPICAL INITIAL 1/2 ROAD SECTION LOCAL RESIDENTIAL ROAD (NON-BUS ROUTES)

Langley City
THE PLACE TO BE

DRAWN	May 2021
REVISED	
SCALE	N.T.S.
	SS-R08A

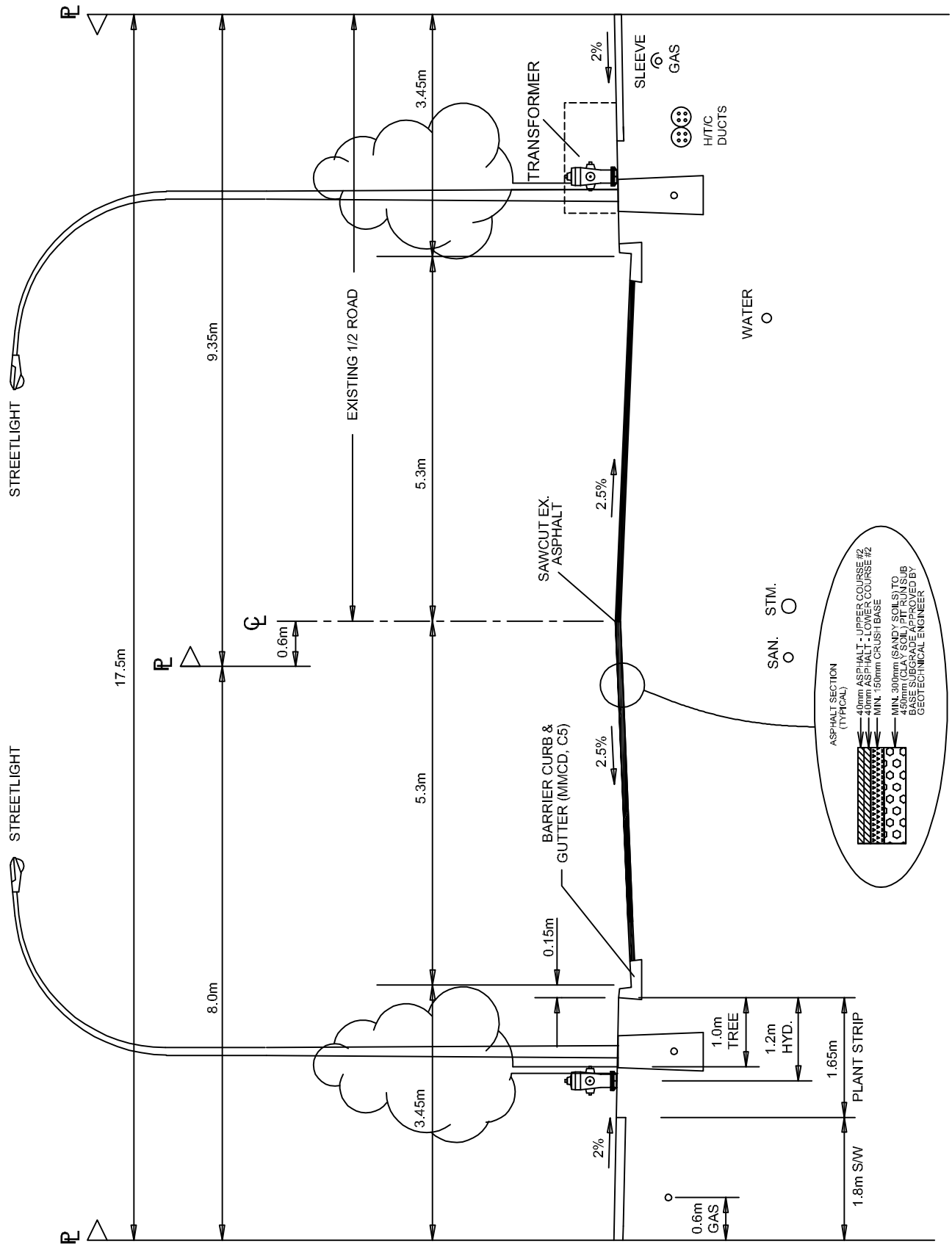

NOTES:
1. INCREASE CROSSFALL TO 3.25% WHEN LONGITUDINAL SLOPE EXCEEDS 5%
2. THE CITY ENGINEER MAY REQUIRE MODIFICATIONS TO THIS CROSS SECTION TO MEET SITE-SPECIFIC SAFETY OBJECTIVES.

TYPICAL REMAINING 1/2 ROAD SECTION LOCAL RESIDENTIAL (NON-BUS ROUTES)	Langley City THE PLACE TO BE	DRAWN May 2021
		REVISED
		SCALE N.T.S.
		SS-R08B

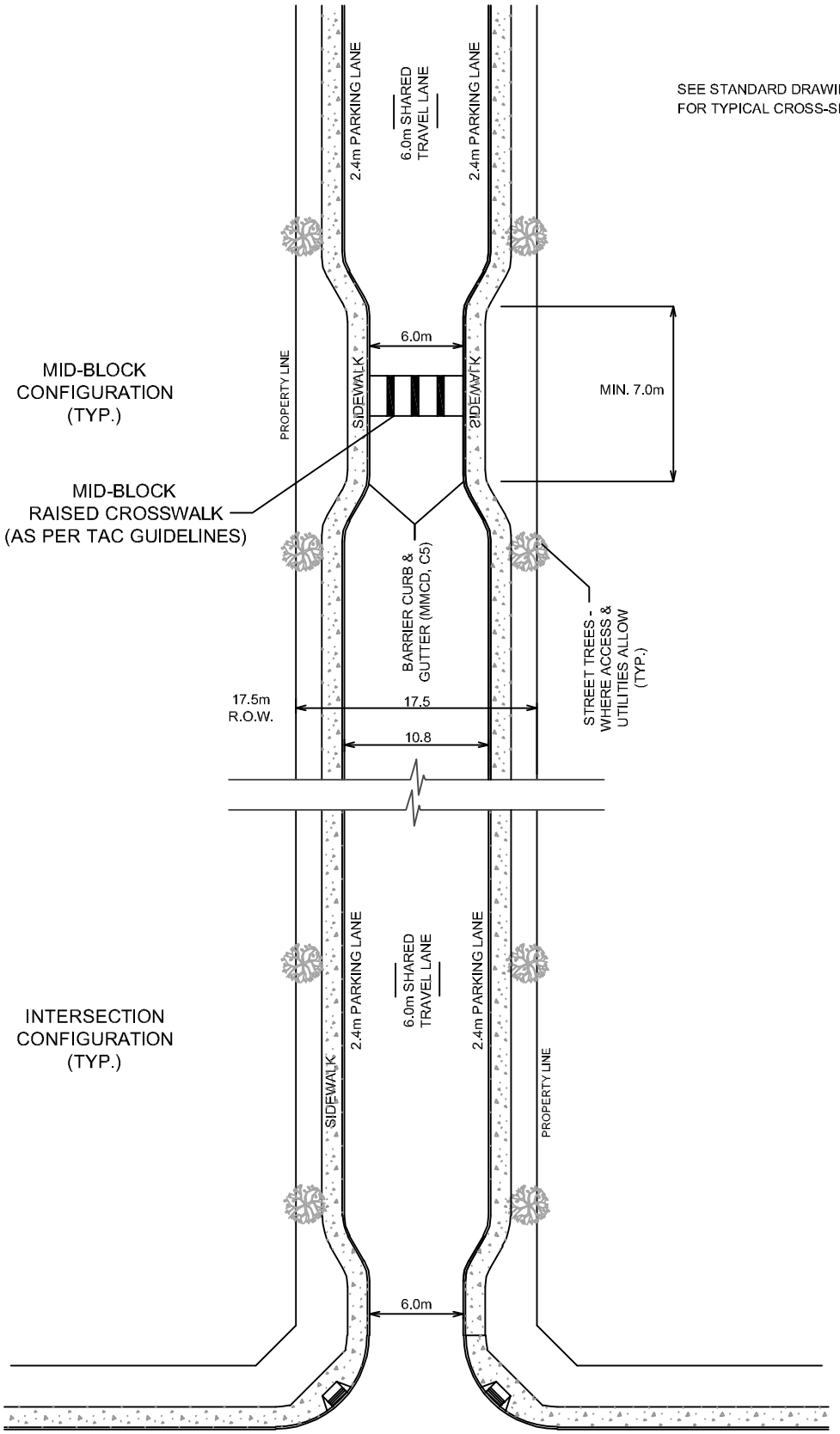

NOTES:

1. SIDEWALK WIDTH 1.7m
2. LANDSCAPING WIDTH MIN. 1.65m
3. THE OUTSIDE RADIUS OF ALL CURB BULGES SHALL BE AT LEAST 4.5m TO FACILITATE STREET SWEEPING

LOCAL RESIDENTIAL - TYPICAL PLAN VIEW w/ TRAFFIC CALMING

Langley City
THE PLACE TO BE

DRAWN	May 2021
REVISED	
SCALE	NTS
	SS-R09

TYPICAL UTILITY OFFSET LOCATIONS	
WATER MAIN	5.0 - 5.5m OFFSET FROM PROPERTY LINE
SANITARY SEWER	6.0m OFFSET FROM PROPERTY LINE, MAINTAIN 3.0m SEPERATION FROM WATER MAIN
STORM SEWER	7.2 - 7.5m OFFSET FROM PROPERTY LINE, MAINTAIN 3.0m SEPERATION FROM WATER MAIN
FIRE HYDRANT	1.2m OFFSET FROM FACE OF CURB (G/L)
STREET LIGHT	0.9m OFFSET FROM BACK OF CURB
GAS MAIN	0.6m OFFSET FROM PROPERTY LINE
HYDRO/TELUS/CABLE	2.0m OFFSET FROM PROPERTY LINE

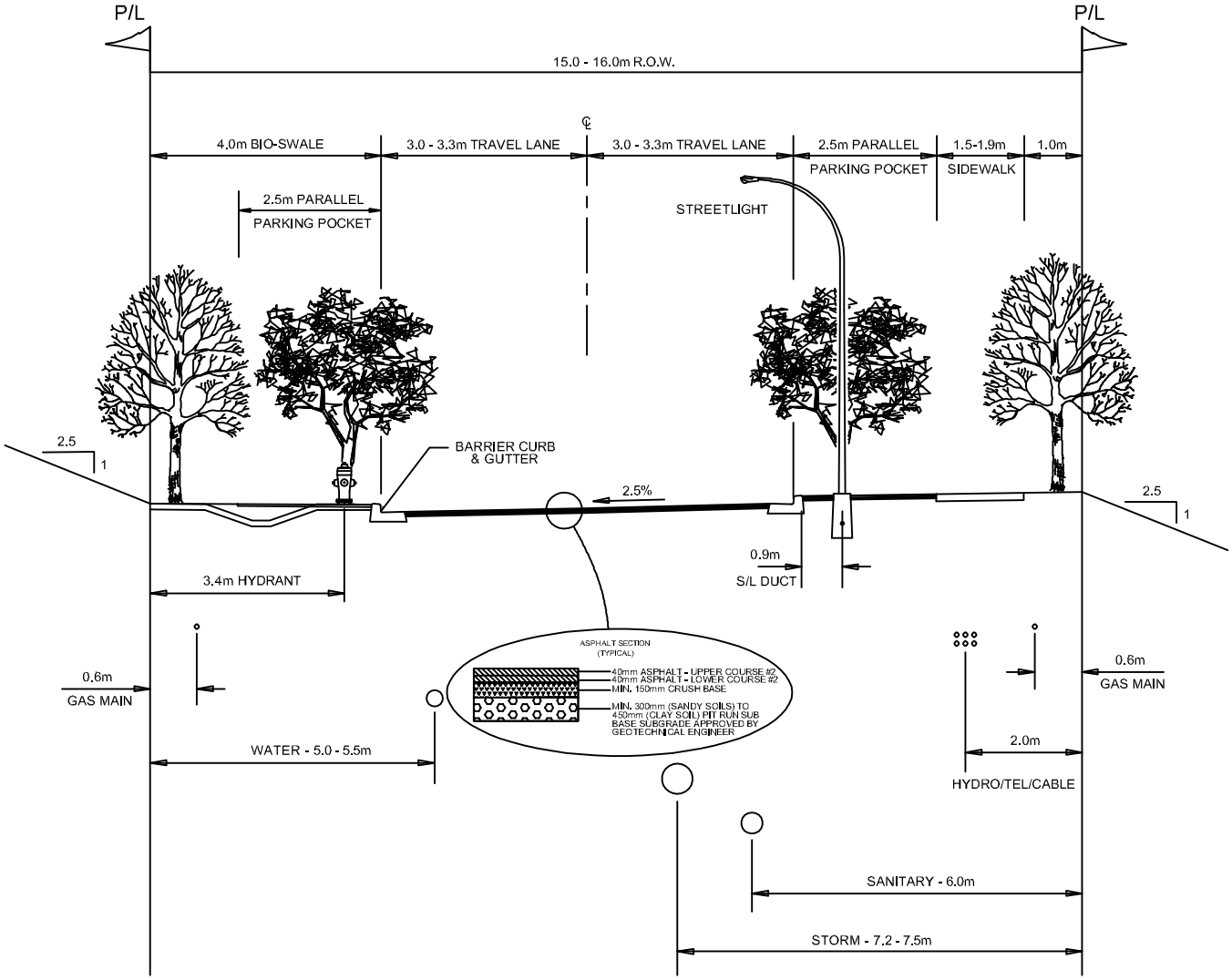

NOTES:
1. INCREASE CROSSFALL TO 3.25% WHEN LONGITUDINAL SLOPE EXCEEDS 5%
2. THE CITY ENGINEER MAY REQUIRE MODIFICATIONS TO THIS CROSS SECTION TO MEET SITE-SPECIFIC SAFETY OBJECTIVES.

LOCAL RESIDENTIAL ROAD

Langley City
THE PLACE TO BE

DRAWN	May 2021
REVISED	
SCALE	N.T.S.
	SS-R10

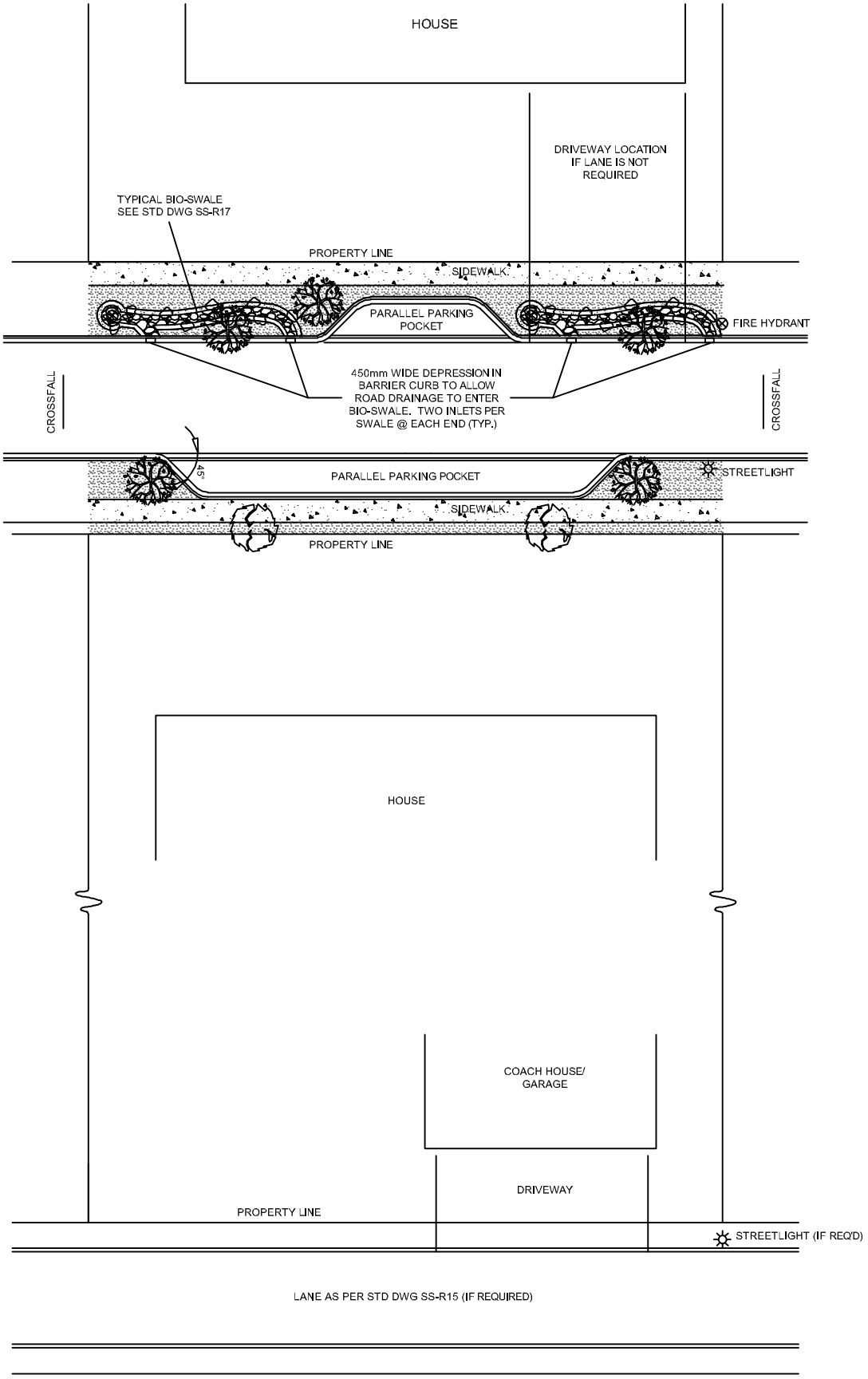

SEE STANDARD DRAWING SS-R10 FOR TYPICAL CROSS-SECTION

LOCAL RESIDENTIAL PLAN VIEW

Langley City
THE PLACE TO BE

DRAWN	Dec 2019
REVISED	
SCALE	N.T.S.

SS-R11

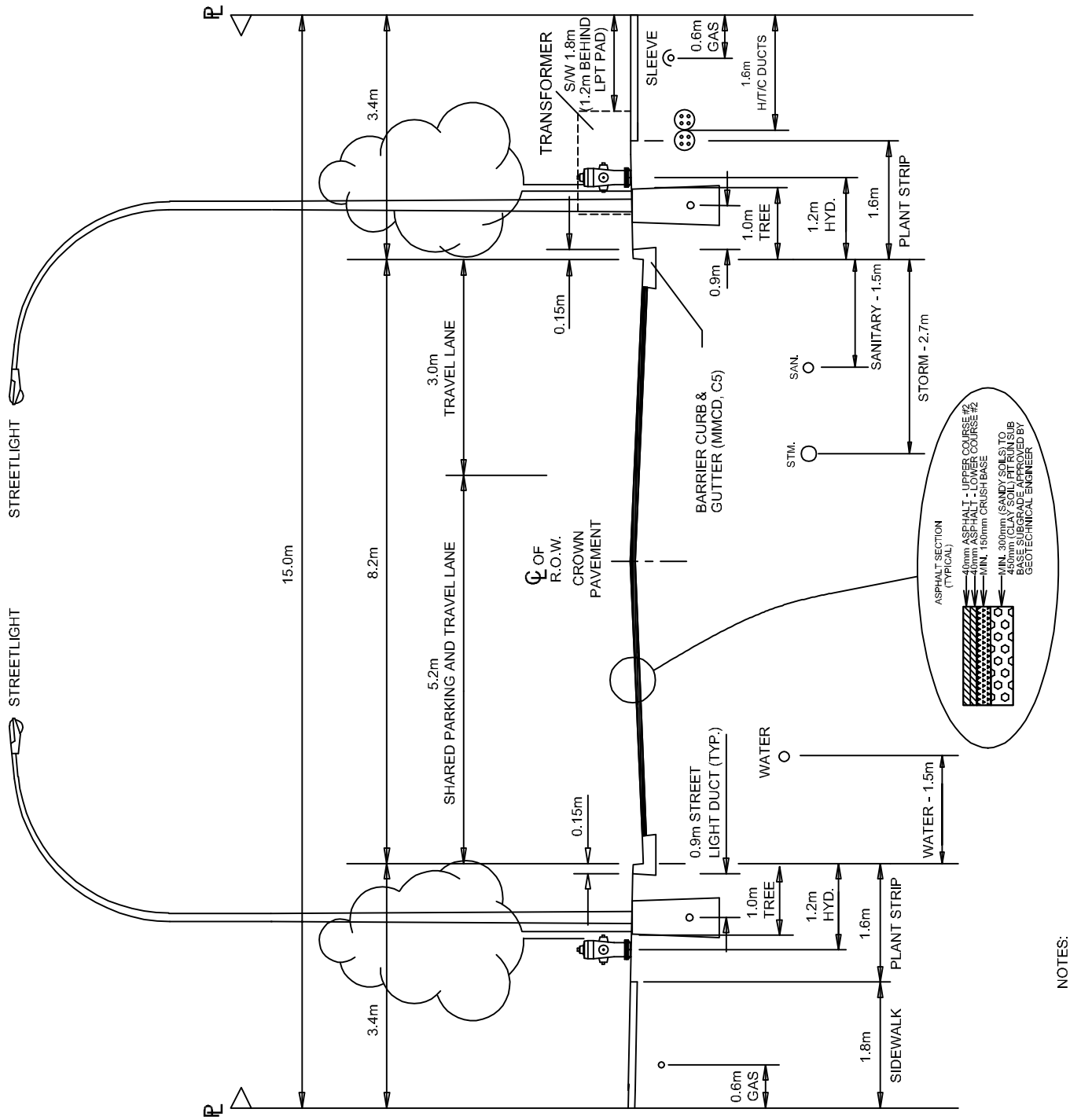

NOTES:
1. INCREASE CROSSFALL TO 3.25% WHEN LONGITUDINAL SLOPE EXCEEDS 5%
2. THE CITY ENGINEER MAY REQUIRE MODIFICATIONS TO THIS CROSS SECTION TO MEET SITE-SPECIFIC SAFETY OBJECTIVES.

LOCAL RESIDENTIAL ROAD (NON-BUS ROUTES)

Langley City
THE PLACE TO BE

DRAWN	May 2021
REVISED	
SCALE	N.T.S.
	SS-R12

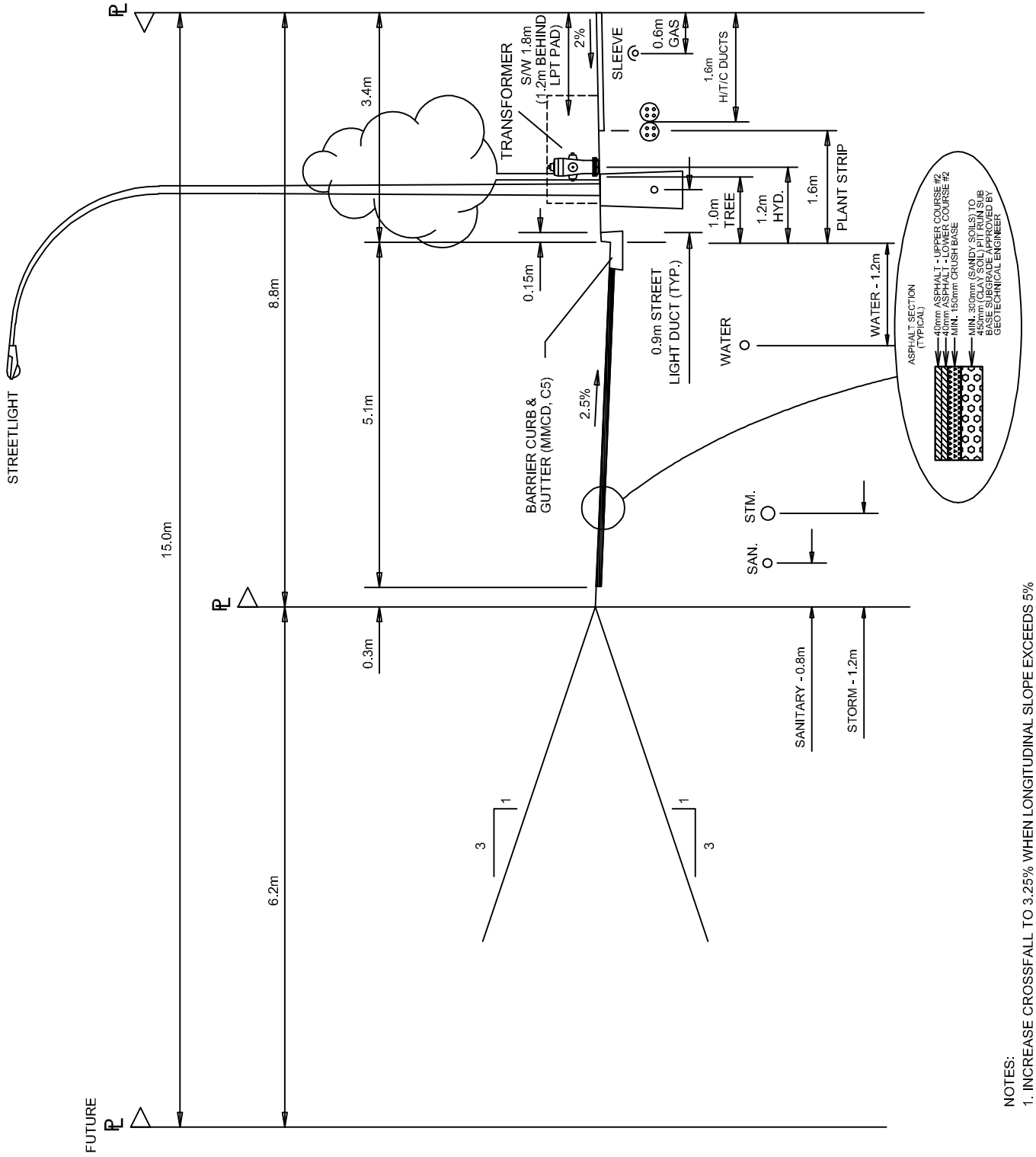

NOTES:
1. INCREASE CROSSFALL TO 3.25% WHEN LONGITUDINAL SLOPE EXCEEDS 5%
2. THE CITY ENGINEER MAY REQUIRE MODIFICATIONS TO THIS CROSS SECTION TO MEET SITE-SPECIFIC SAFETY OBJECTIVES.

TYPICAL INITIAL 1/2 ROAD SECTION
LOCAL RESIDENTIAL ROAD
(NON-BUS ROUTES)

Langley City
THE PLACE TO BE

DRAWN	May 2021
REVISED	
SCALE	N.T.S.
	SS-R12A

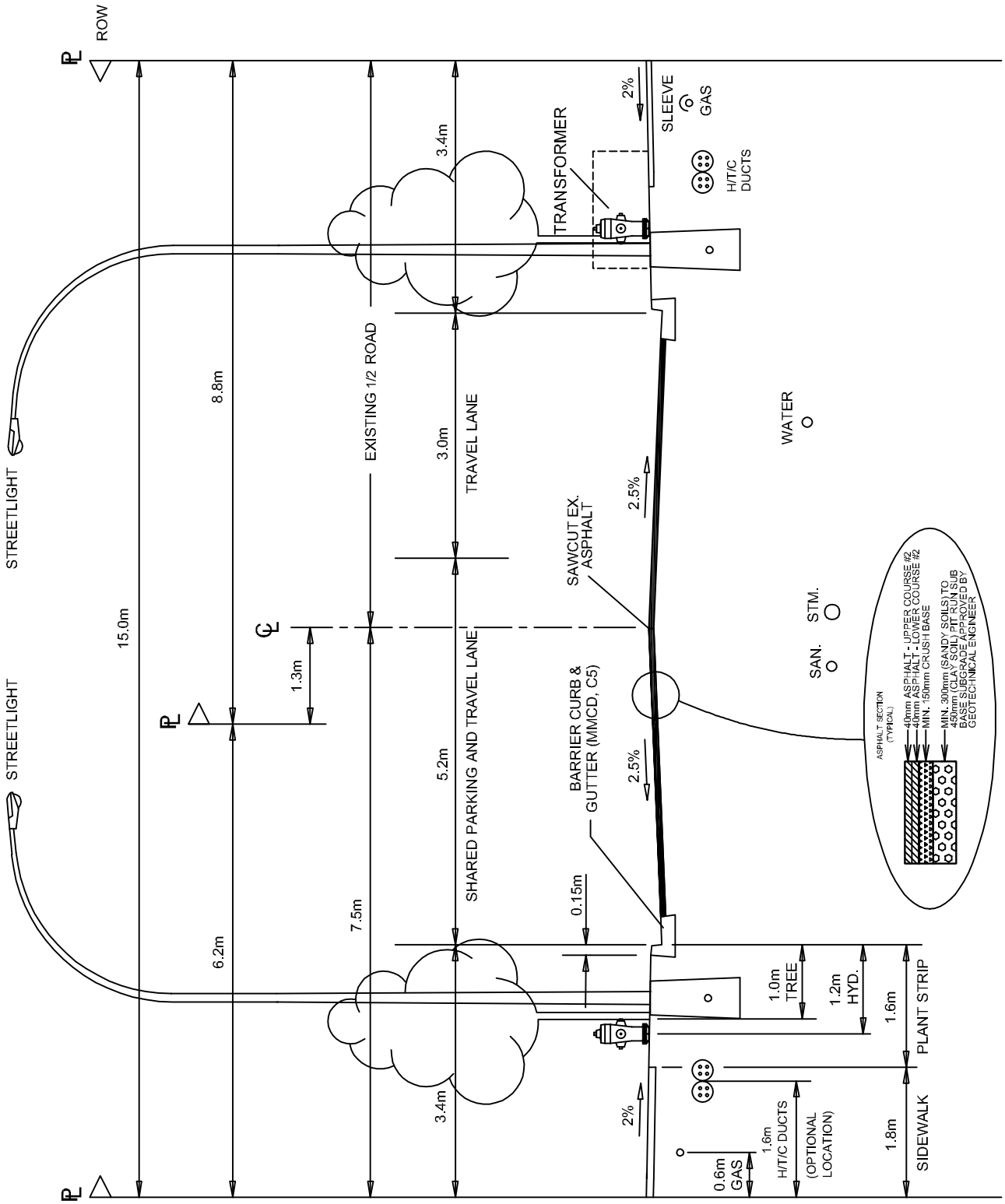

NOTES:
1. INCREASE CROSSFALL TO 3.25% WHEN LONGITUDINAL SLOPE EXCEEDS 5%
2. THE CITY ENGINEER MAY REQUIRE MODIFICATIONS TO THIS CROSS SECTION TO MEET SITE-SPECIFIC SAFETY OBJECTIVES.

TYPICAL REMAINING 1/2 ROAD SECTION LOCAL RESIDENTIAL ROAD (NON-BUS ROUTES)	Langley City THE PLACE TO BE	DRAWN May 2021
		REVISED
		SCALE N.T.S.
		SS-R12B

EXISTING LOCAL RESIDENTIAL ACCESS LANE (CENTERLINE DRAINAGE)

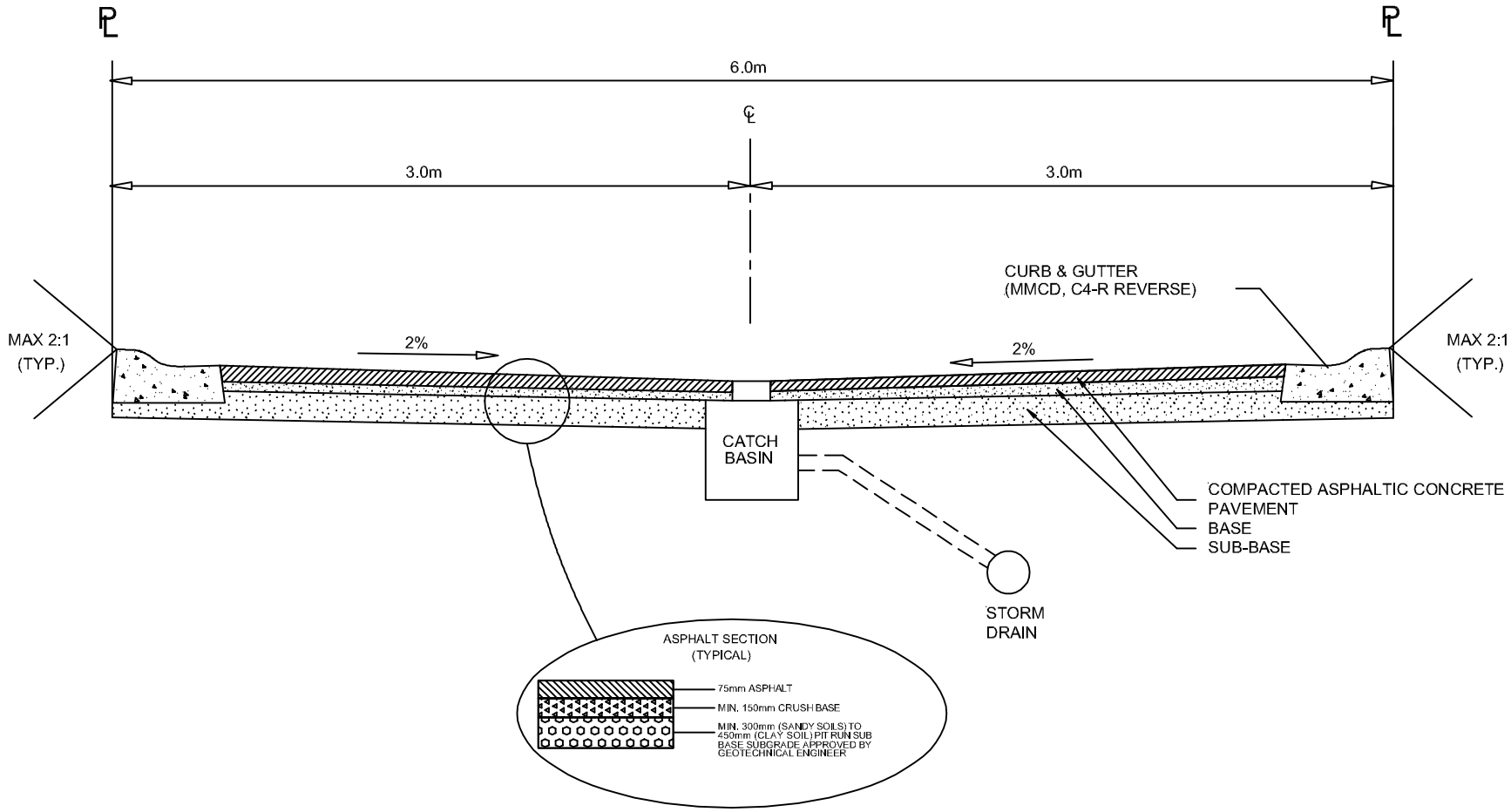

NOTES:
1. APPLICABLE WHEN NO FIRE TRUCK ACCESS IS REQUIRED
2. THE CITY ENGINEER MAY REQUIRE MODIFICATIONS TO THIS CROSS SECTION TO MEET SITE-SPECIFIC SAFETY OBJECTIVES.

Langley City
THE PLACE TO BE

DRAWN	May 2021
REVISED	
SCALE	N.T.S.

SS-R13

EXISTING LOCAL RESIDENTIAL ACCESS LANE (ONE WAY CROSS-FALL)

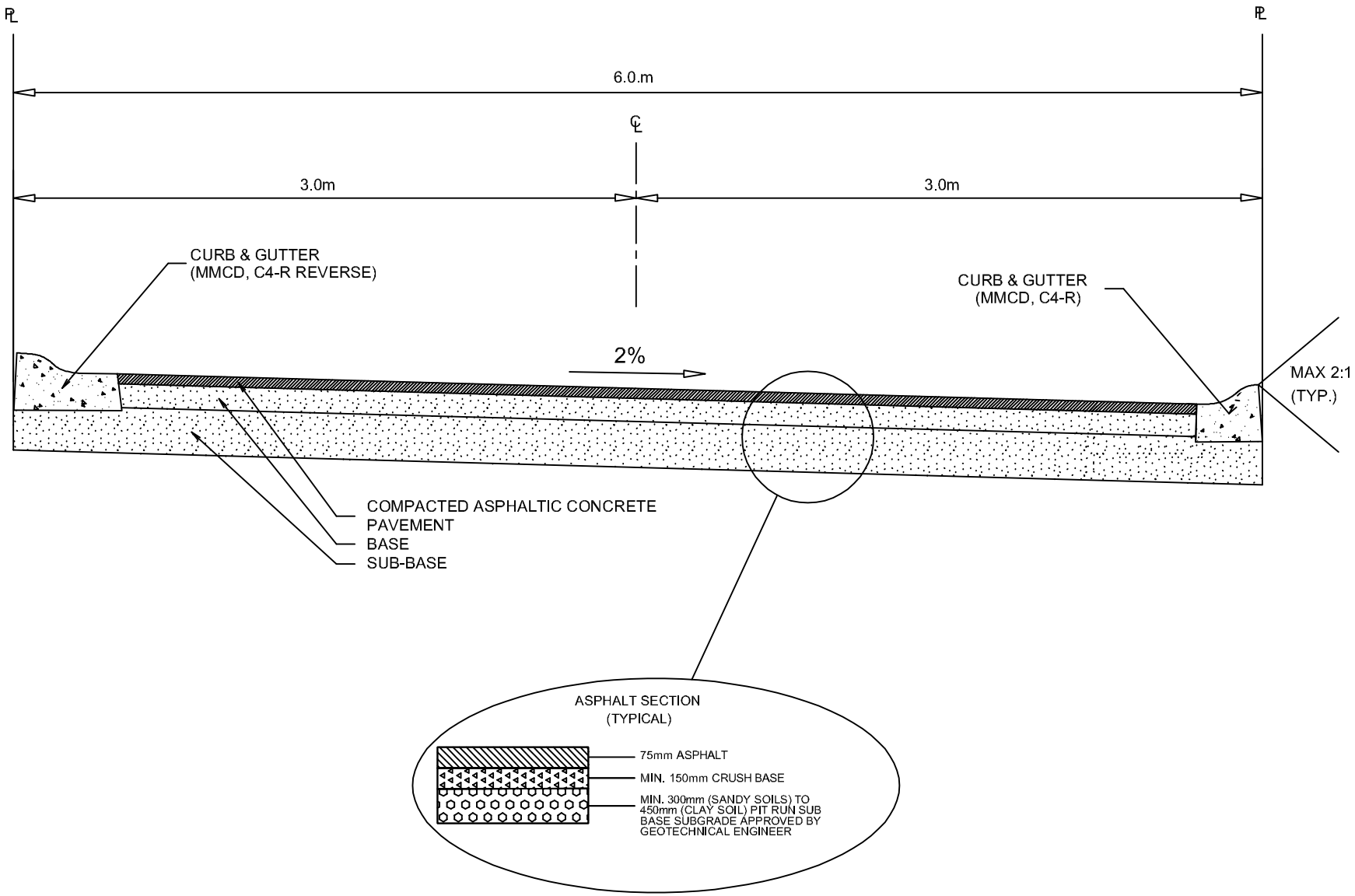

NOTES:
1. APPLICABLE WHEN NO FIRE TRUCK ACCESS IS REQUIRED
2. THE CITY ENGINEER MAY REQUIRE MODIFICATIONS TO THIS CROSS SECTION TO MEET SITE-SPECIFIC SAFETY OBJECTIVES.

Langley City
THE PLACE TO BE

DRAWN	May 2021
REVISED	
SCALE	N.T.S.

SS-R14

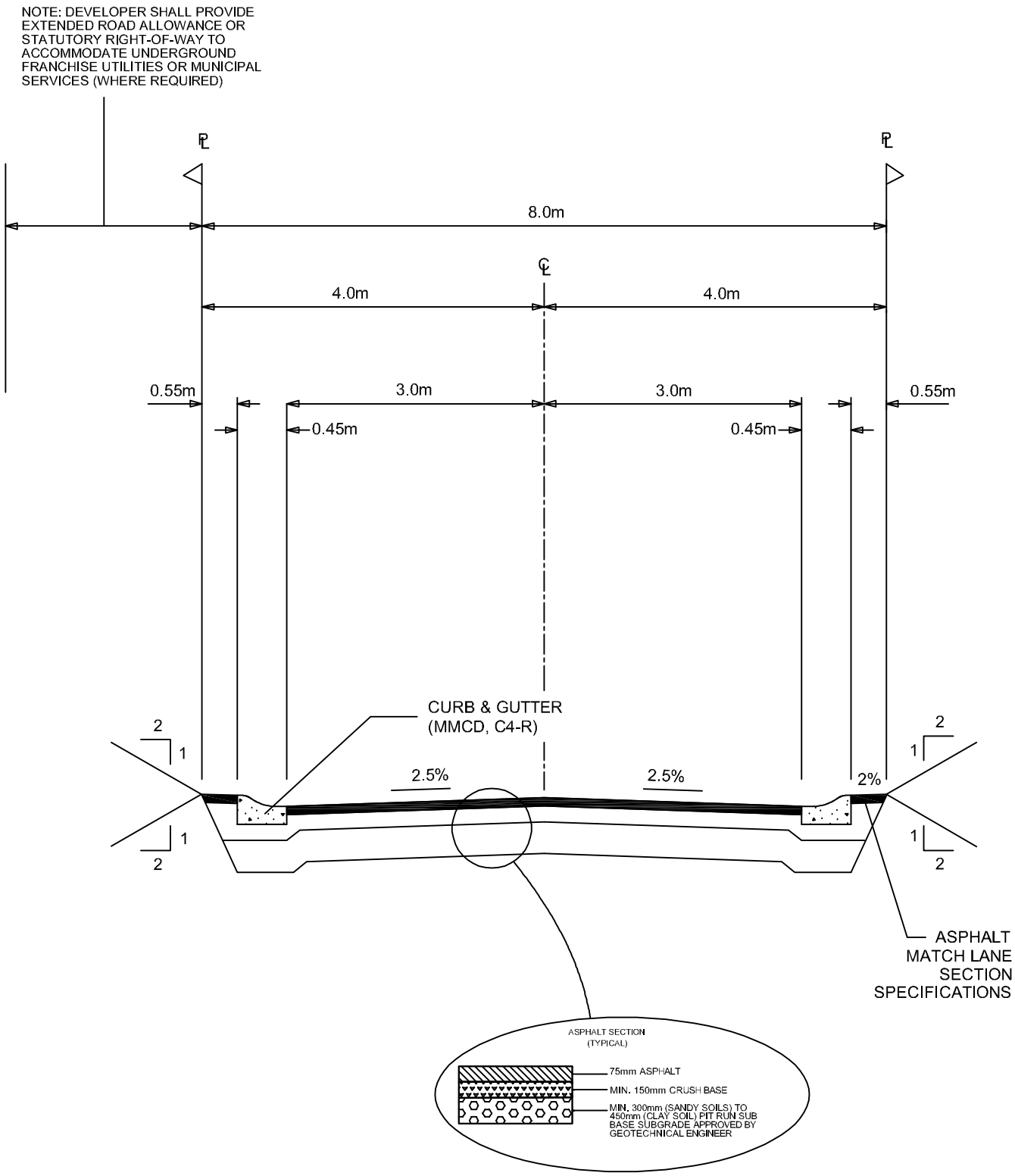

NOTE:

1. THE CITY ENGINEER MAY REQUIRE MODIFICATIONS TO THIS CROSS SECTION TO MEET SITE-SPECIFIC SAFETY OBJECTIVES.

ACCESS LANE (CENTERLINE CROWN)	Langley City THE PLACE TO BE	DRAWN Dec 2019
		REVISED
		SCALE NTS
		SS-R15

INDUSTRIAL

TYPICAL UTILITY OFFSET LOCATIONS	
WATER MAIN	5.75m OFFSET FROM PROPERTY LINE
SANITARY SEWER	6.0m OFFSET FROM PROPERTY LINE, MAINTAIN 3.0m SEPERATION FROM WATER MAIN
STORM SEWER	7.2m OFFSET FROM PROPERTY LINE, MAINTAIN 3.0m SEPERATION FROM WATER MAIN
FIRE HYDRANT	1.2m OFFSET FROM FACE OF CURB (G/L)
STREET LIGHT	0.9m OFFSET FROM BACK OF CURB
GAS MAIN	0.6m OFFSET FROM PROPERTY LINE
HYDRO/TELUS/CABLE	2.0m OFFSET FROM PROPERTY LINE
PLANTING STRIP	1.5m WIDTH BETWEEN BACK OPF CURB & FRONT EDGE OF S/W TO ACCOMODATE DOBNEY FOUNDRY TREE GATE SP-60

NOTE:
WHERE EXISTING O/H POWER PLANT IS AT 1.8m, IT CAN REMAIN AS LONG AS MINIMUM LIGHTING STANDARDS CAN BE ACHIEVED. STREETLIGHT MAY BE REQUIRED AS ALTERNATIVE TO LEASE STREETLIGHTING.

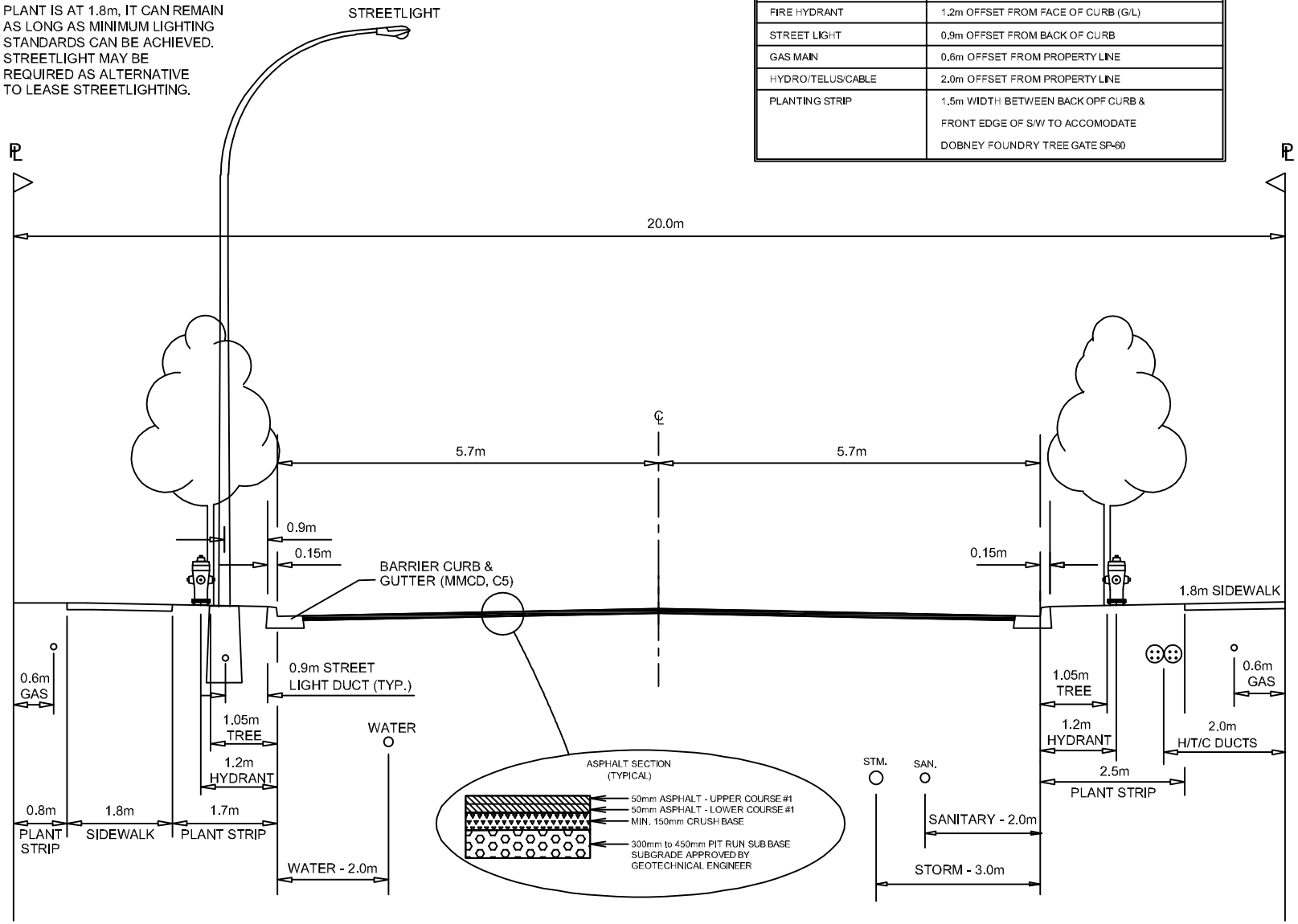

NOTES:
1. INCREASE CROSSFALL TO 3.25% WHEN LONGITUDINAL SLOPE EXCEEDS 5%
2. THE CITY ENGINEER MAY REQUIRE MODIFICATIONS TO THIS CROSS SECTION TO MEET SITE-SPECIFIC SAFETY OBJECTIVES.

Langley City
THE PLACE TO BE

DRAWN May 2021
REVISED
SCALE N.T.S.

SS-R16

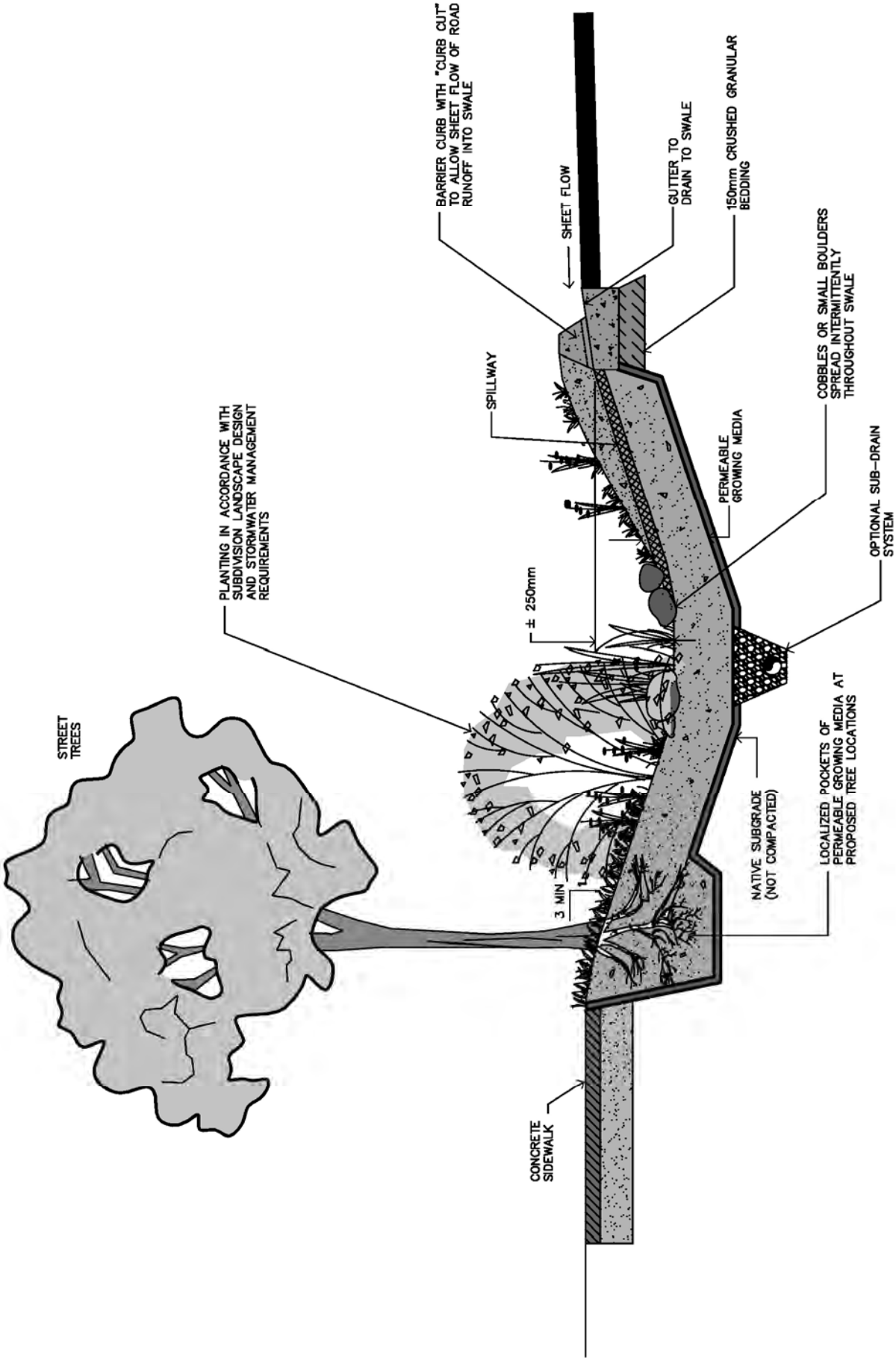

TYPICAL BIOSWALE
(SAMPLE ONLY)

Langley City
THE PLACE TO BE

DRAWN	Dec 2019
REVISED	
SCALE	N.T.S.
	SS-R17

NOTE
SIDEWALK IN RESIDENTIAL CUL-DE-SAC WHEN CONNECTING TO A WALKWAY.

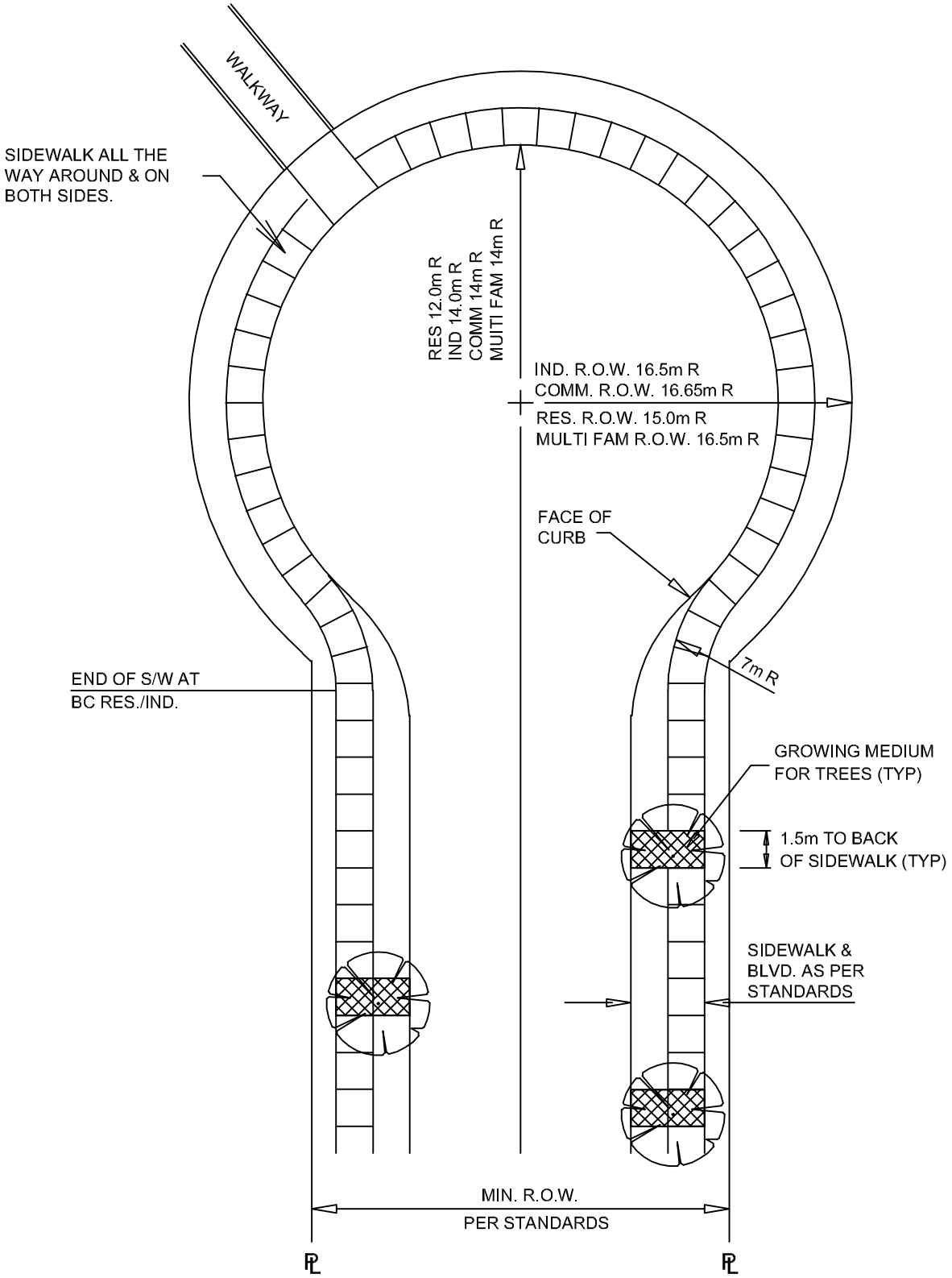

TYPICAL CUL-DE-SAC SIDEWALK WITH LANDSCAPED BLVD.	Langley City THE PLACE TO BE	DRAWN Dec 2019
		REVISED
		SCALE N.T.S.
		SS-R18

NOTE
SIDEWALK IN RESIDENTIAL CUL-DE-SAC WHEN CONNECTING TO A WALKWAY.

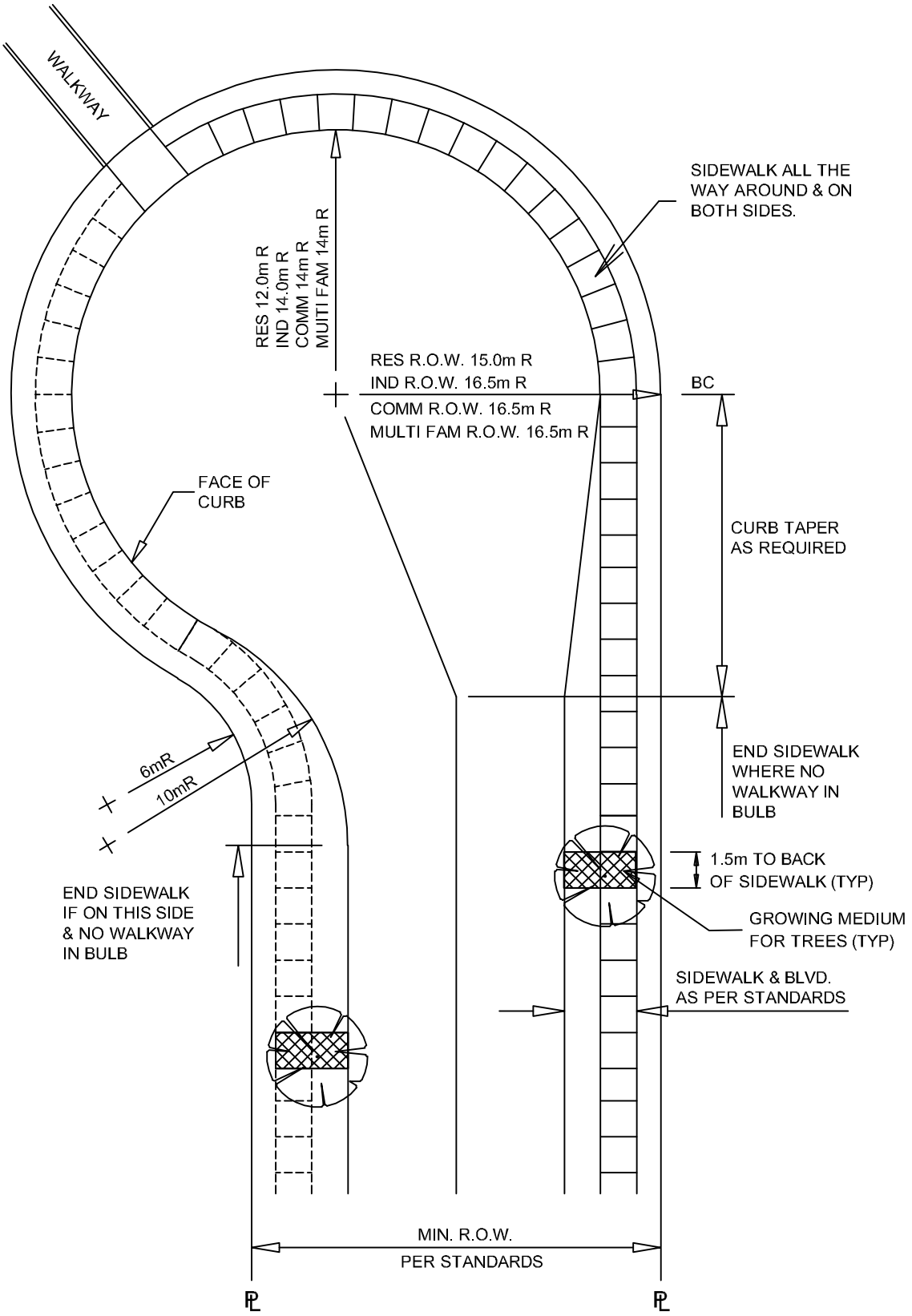

TYPICAL CUL-DE-SAC OFFEST TYPE SIDEWALK WITH LANDSCAPED BLVD.

Langley City
THE PLACE TO BE

DRAWN	Dec 2019
REVISED	
SCALE	N.T.S.
	SS-R19

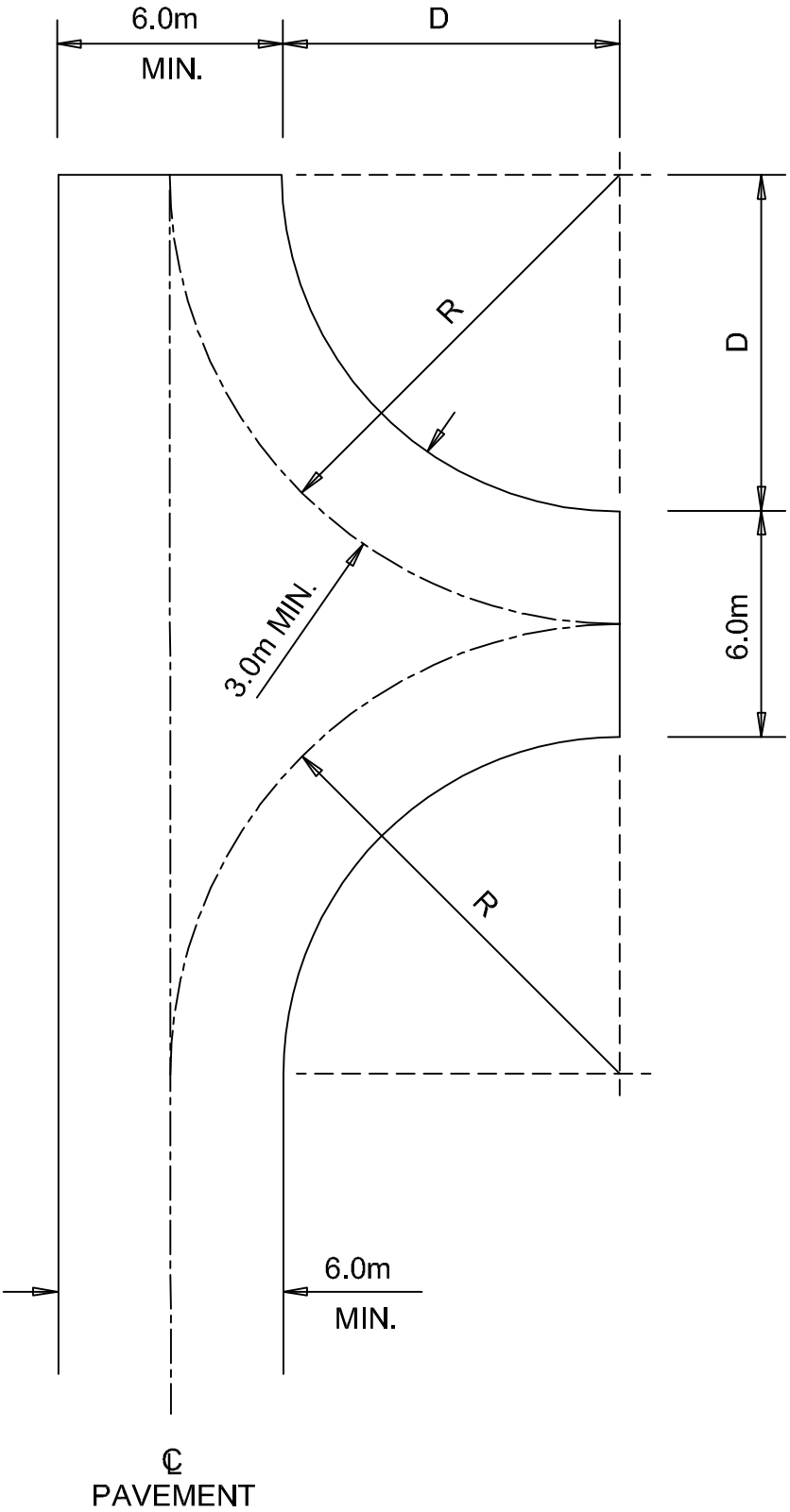

R = MINIMUM RADIUS = 12.0m

D = DISTANCE (RADIUS - (ROAD WIDTH/2))

TYPICAL TEMPORARY HAMMERHEAD TURN AROUND RESIDENTIAL	Langley City THE PLACE TO BE	DRAWN May 2021
		REVISED
		SCALE N.T.S.
		SS-R20

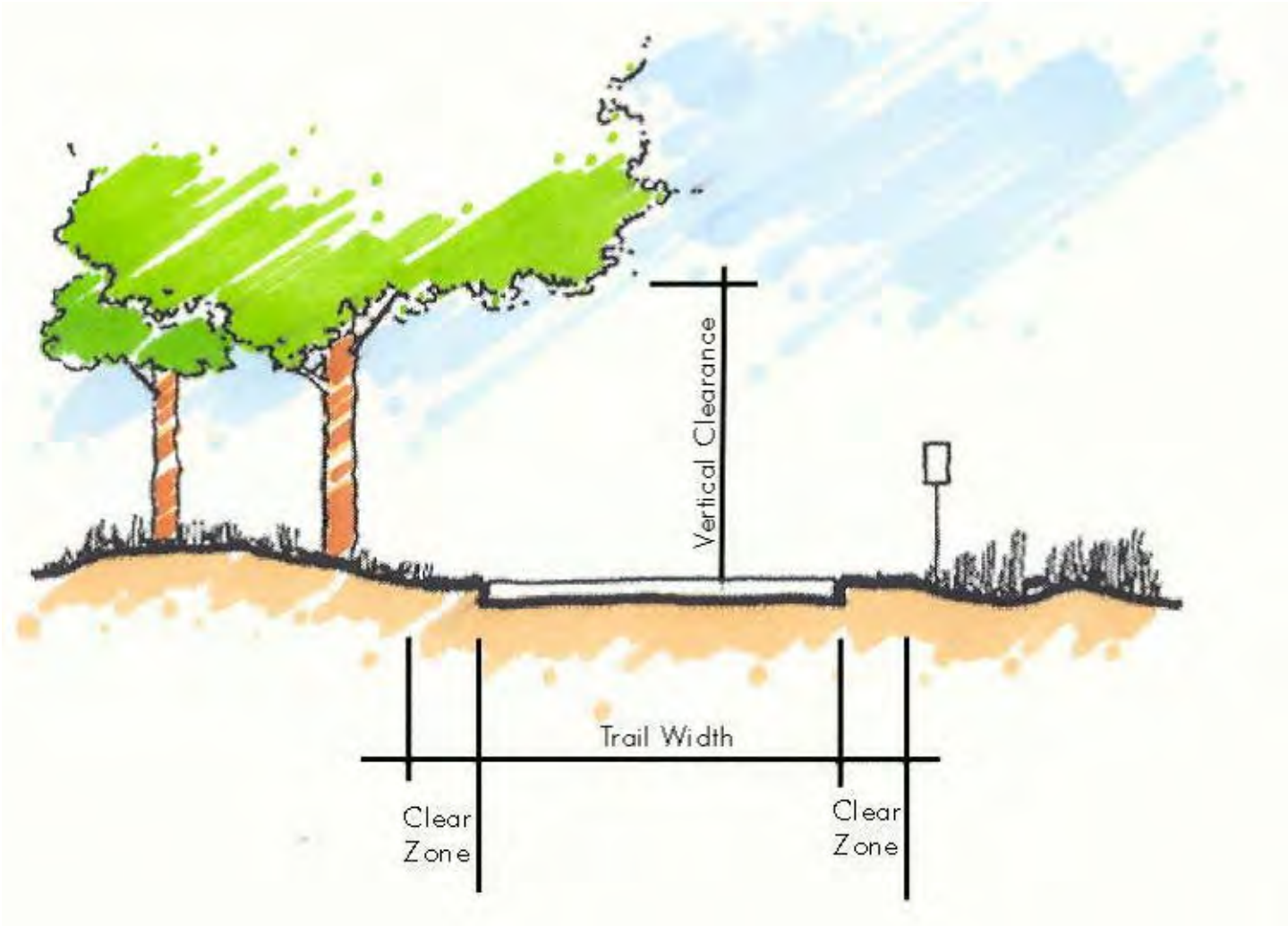

Trail Classifications	Trail Width (m)	Clear Zone (m)	Vertical Clearance (m)	Surface Material
Multi-purpose	2.5 – 4.5	1.0 – 2.0	3	Asphalt
Urban Nature	2.0 – 2.7	1	3	gravel, hog fuel, crushed concrete, recycled asphalt, or crushed granite
Nature or Hiking	1.5 – 2.0	0.5 – 1.0	2.5	gravel, or native soil

TYPICAL TRAIL
CROSS SECTION

Langley City
THE PLACE TO BE

DRAWN	Dec 2019
REVISED	
SCALE	N.T.S.
	SS-R21

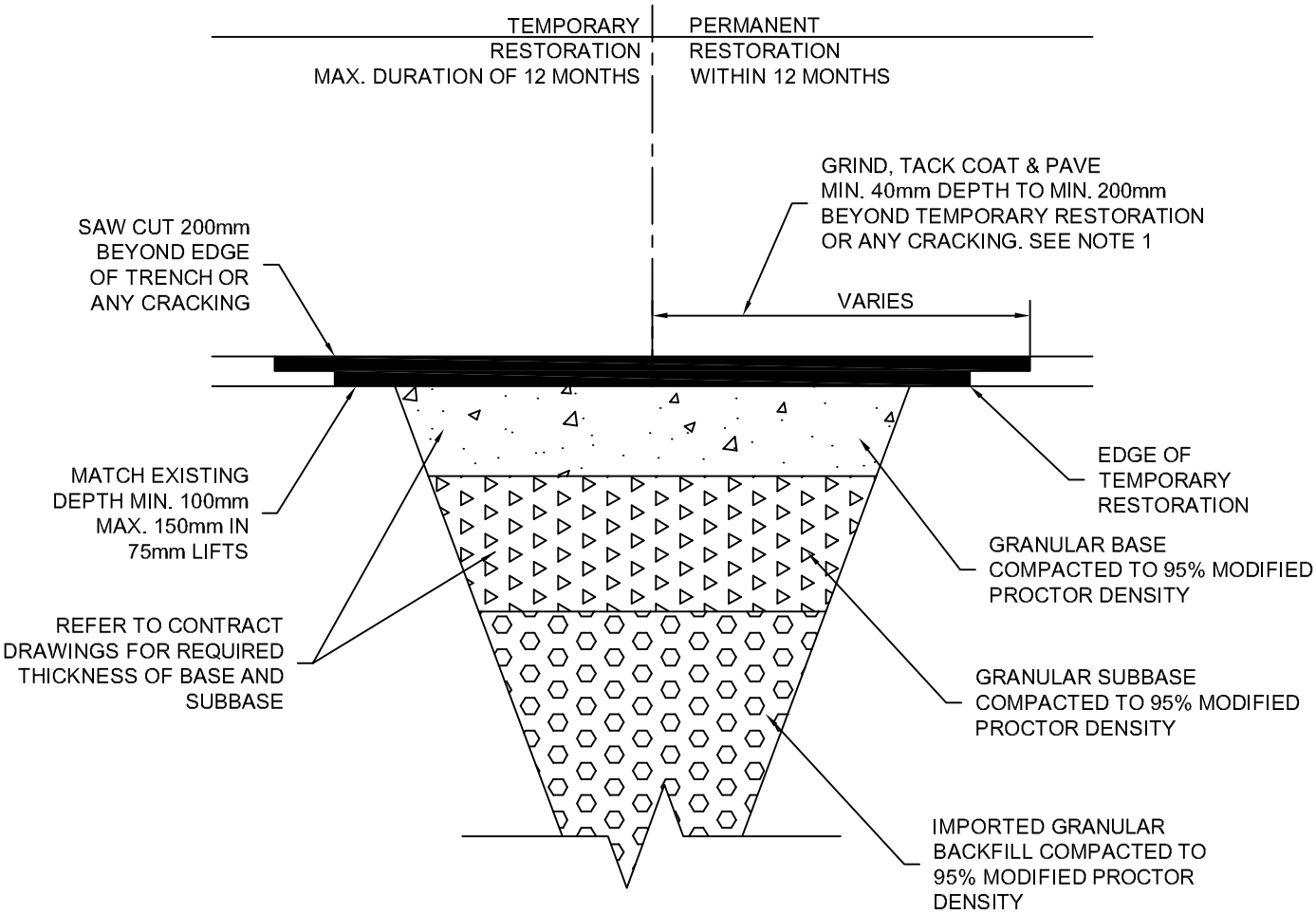

NOTES:

1. REFER TO SS-R23, SS-R23A AND SS-R23B FOR ADDITIONAL REQUIREMENTS.
2. TEMPORARY RESTORATION TO BE COMPLETED AT THE END OF EACH WORKING DAY IF THE ROAD IS OPEN TO THE PUBLIC.
3. ROAD BASE AND SUB-BASE SHOWN FOR VISUAL PURPOSES ONLY. REFER TO APPLICABLE DOCUMENT FOR SPECIFIC DETAILS.

UTILITY TRENCH PAVEMENT RESTORATION (REPLACES MMCD-G5)	Langley City THE PLACE TO BE	DRAWN Dec 2019
		REVISED
		SCALE N.T.S.
		SS-R22

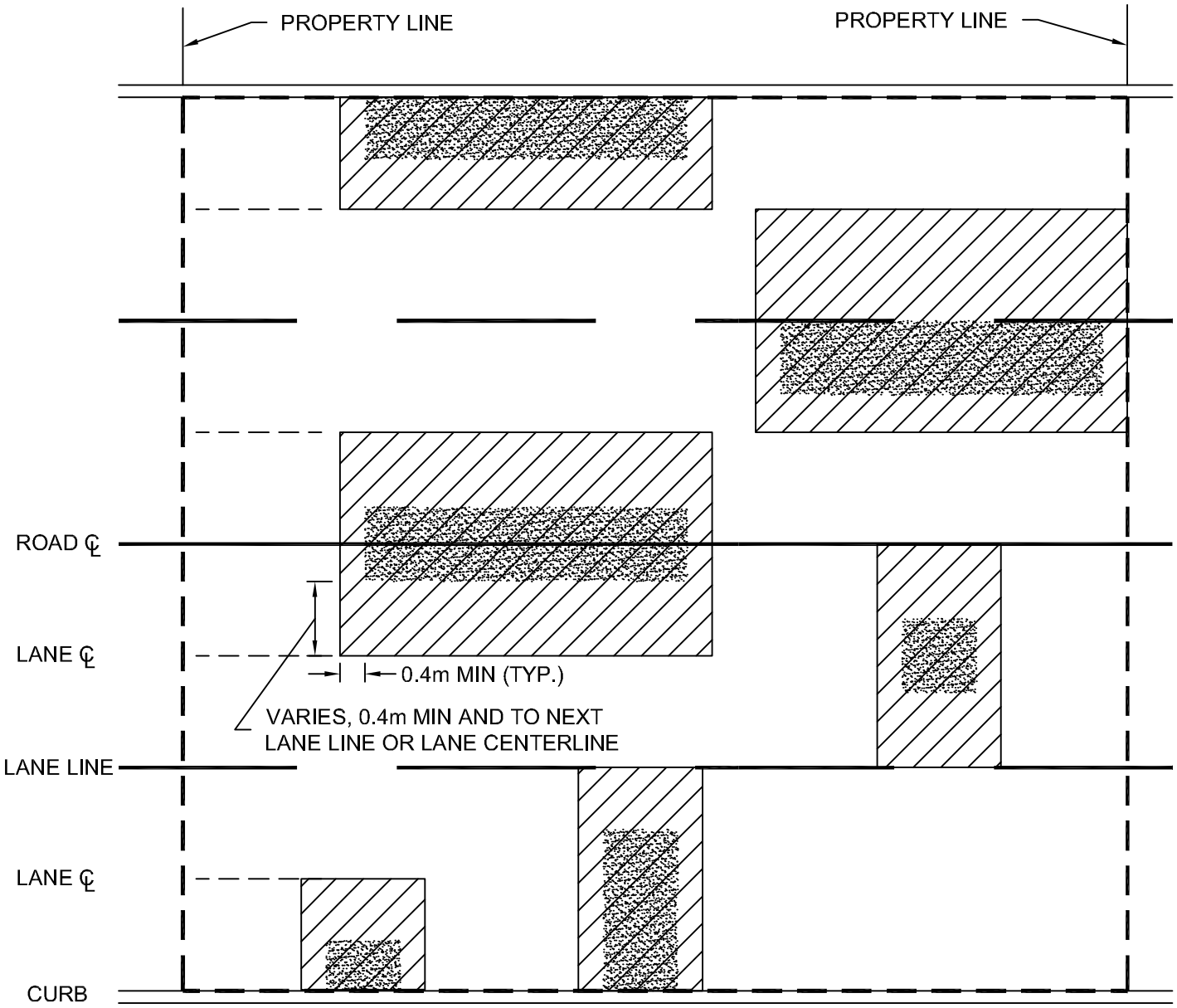

LEGEND:

RESTORATION EXTENT WHEN PAVEMENT IS LESS THAN 5 YRS OLD

PERMANENT PAVEMENT RESTORATION EXTENT

TRENCH LIMITS AT TOP OF PAVEMENT

NOTE:

1. PAVEMENT DEPTH 50mm MIN. IN ACCORDANCE WITH STANDARD DRAWING SS-R22.
2. ALL CUTS SHALL BE PERPENDICULAR TO DIRECTION OF TRAVEL.
3. HOT MIX ASPHALT CONCRETE ONLY.

PAVEMENT CUT RESTORATION REQUIREMENTS	Langley City THE PLACE TO BE	DRAWN Dec 2019
		REVISED
		SCALE N.T.S.
		SS-R23

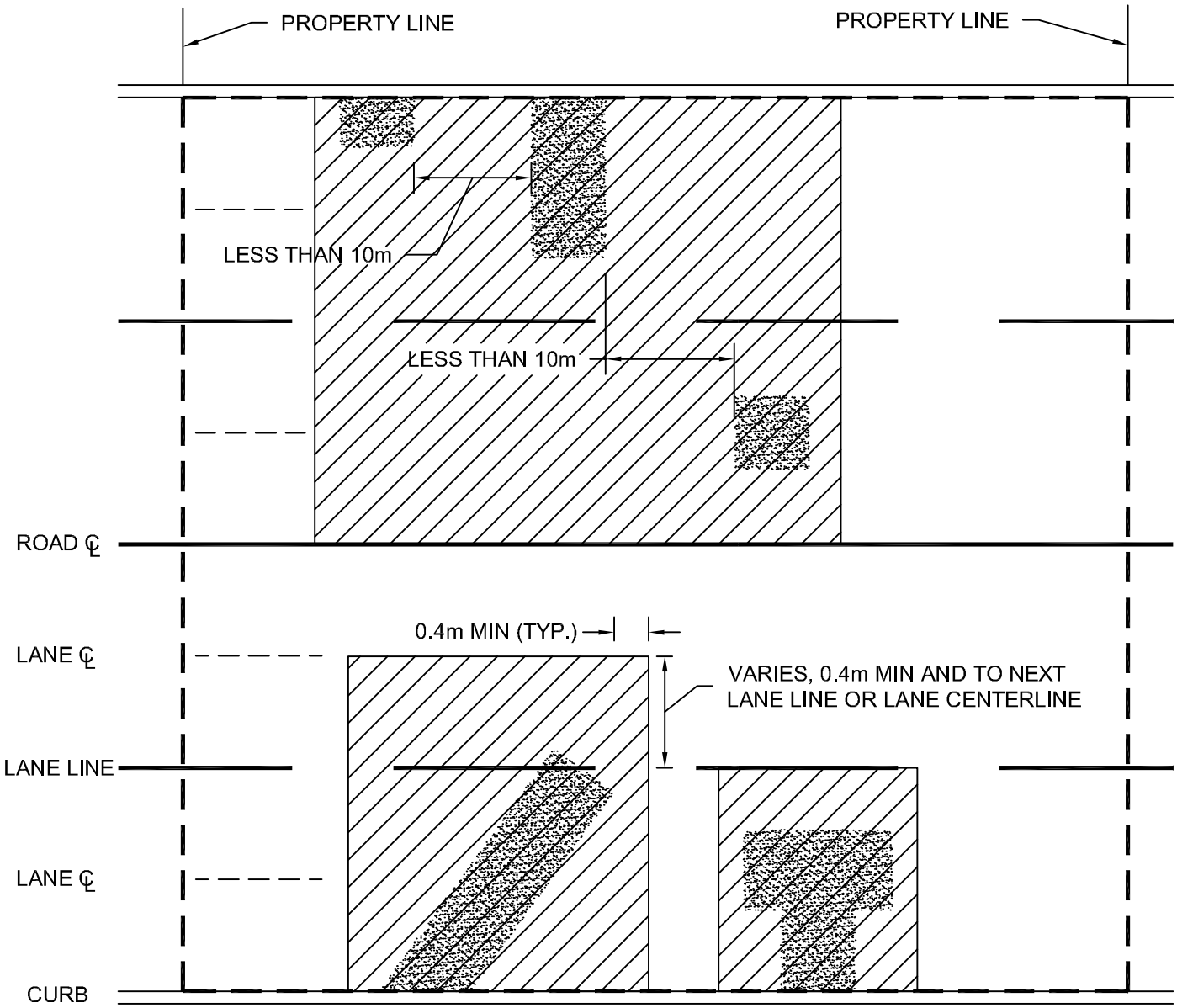

LEGEND:

- RESTORATION EXTENT WHEN PAVEMENT IS LESS THAN 5 YRS OLD
- PERMANENT PAVEMENT RESTORATION EXTENT
- TRENCH LIMITS AT TOP OF PAVEMENT

NOTE:

1. PAVEMENT DEPTH 50mm MIN. IN ACCORDANCE WITH STANDARD DRAWING SS-R22.
2. ALL CUTS SHALL BE PERPENDICULAR TO DIRECTION OF TRAVEL.
3. HOT MIX ASPHALT CONCRETE ONLY.

PAVEMENT CUT RESTORATION REQUIREMENTS	Langley City THE PLACE TO BE	DRAWN Dec 2019
		REVISED
		SCALE N.T.S.
		SS-R23A

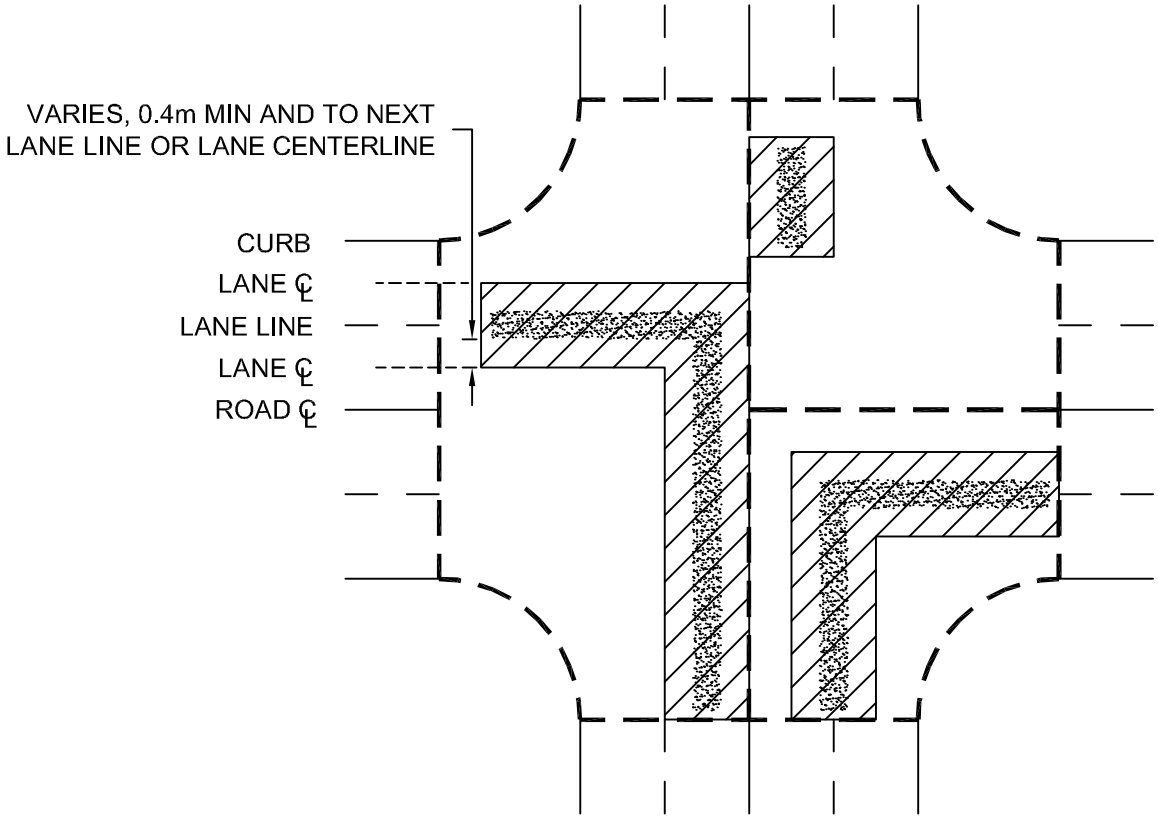

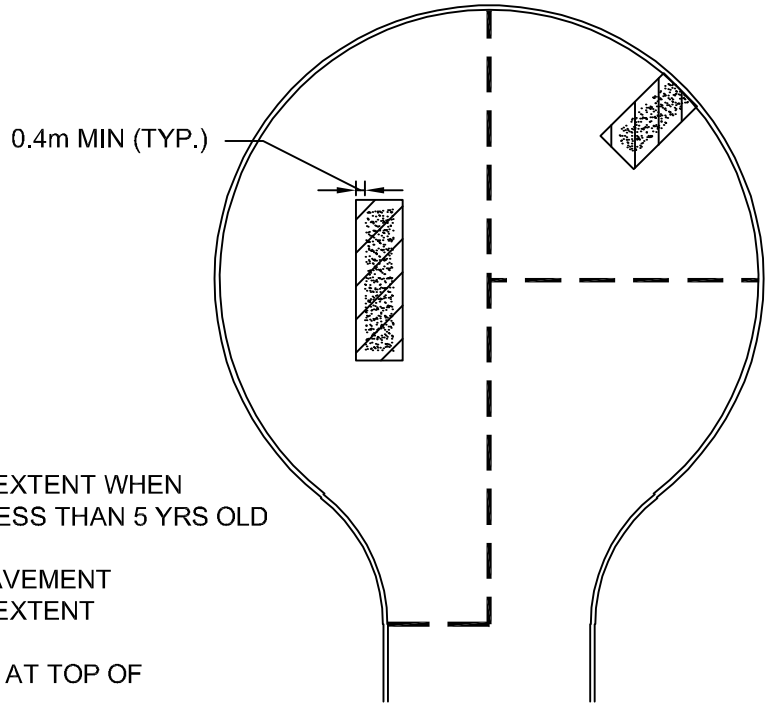

LEGEND:

- RESTORATION EXTENT WHEN PAVEMENT IS LESS THAN 5 YRS OLD
- PERMANENT PAVEMENT RESTORATION EXTENT
- TRENCH LIMITS AT TOP OF PAVEMENT

NOTE:

1. PAVEMENT DEPTH 50mm MIN. IN ACCORDANCE WITH STANDARD DRAWING SS-R22.
2. ALL CUTS SHALL BE PERPENDICULAR TO DIRECTION OF TRAVEL.
3. HOT MIX ASPHALT CONCRETE ONLY.

PAVEMENT CUT RESTORATION REQUIREMENTS	Langley City THE PLACE TO BE	DRAWN Dec 2019
		REVISED
		SCALE N.T.S.
		SS-R23B

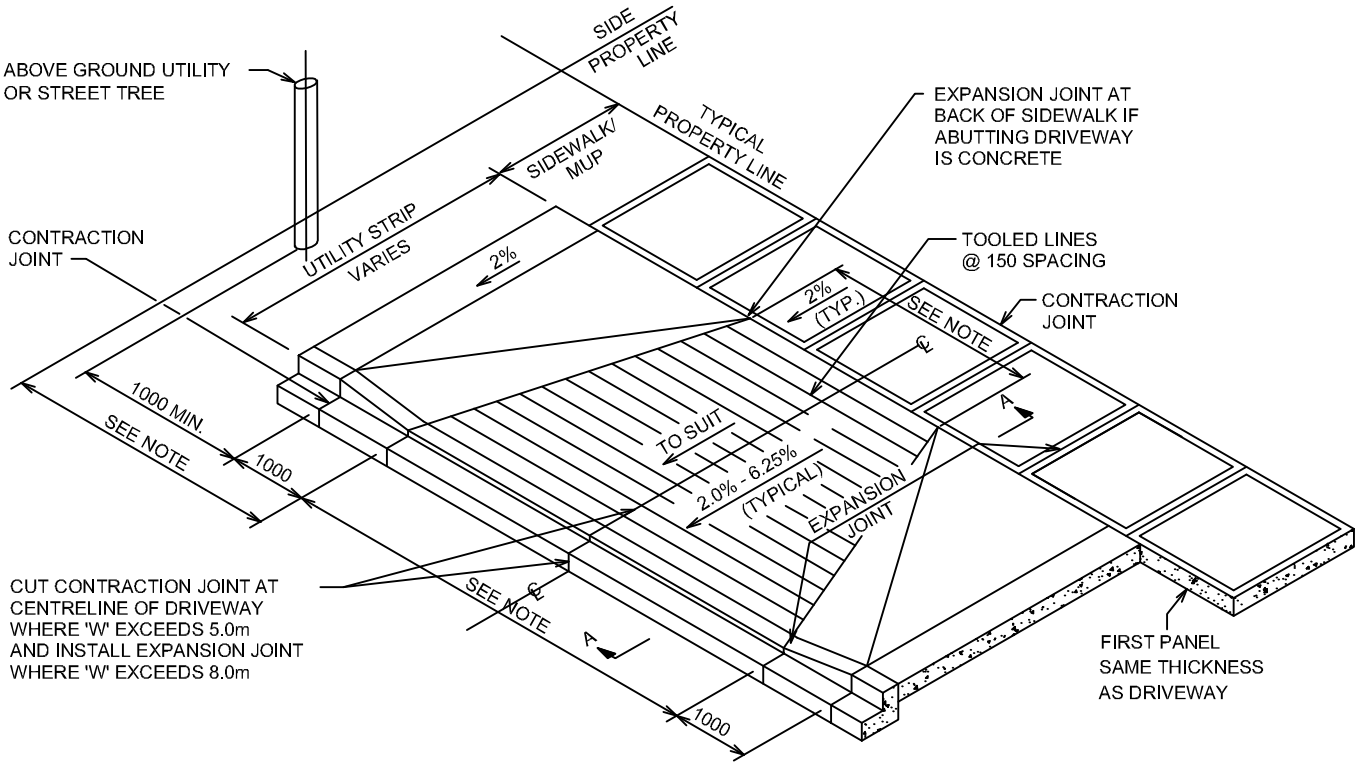

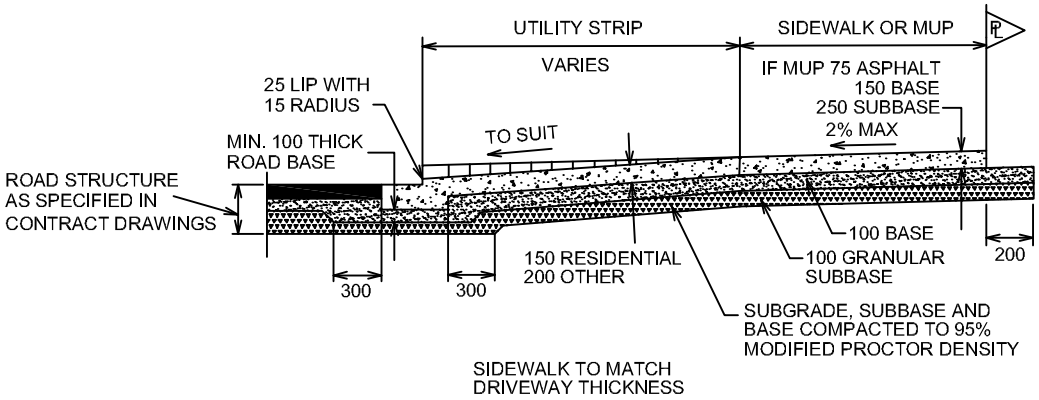

SECTION A-A

NOTE: REFER TO CITY'S DESIGN CRITERIA MANUAL FOR DIMENSIONS.

DRIVEWAYS, MULTI-FAMILY / COMMERICIAL / INDUSTRIAL LETDOWN (REPLACES MMCD-C7)	Langley City THE PLACE TO BE	DRAWN Dec 2019
		REVISED
		SCALE N.T.S.
		SS-R24

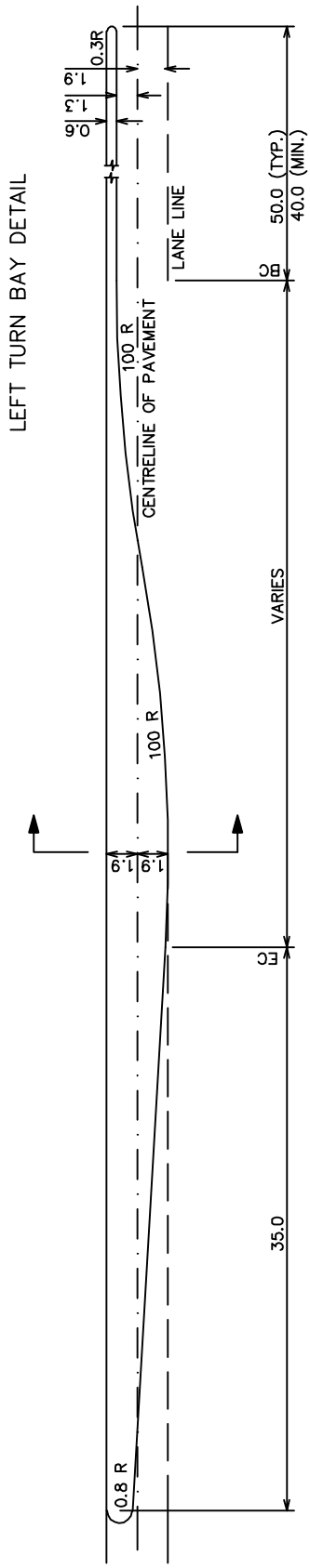

RAISED MEDIAN DEVELOPED
FROM TWO-WAY LEFT LANE

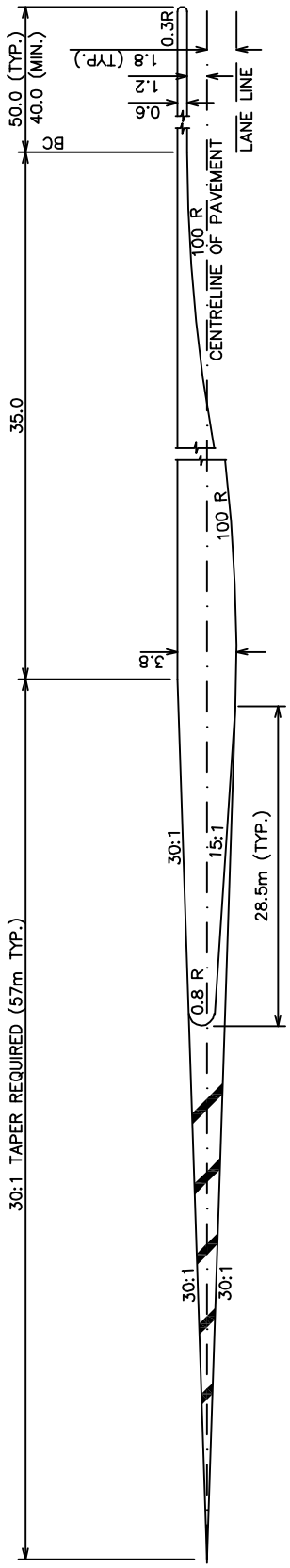

RAISED MEDIAN DEVELOPED
FROM CENTRELINE

NOTE: (1) REFER TO SS-R26 FOR MEDIAN DESIGN.
(2) SLEEVES TO BE INSTALLED FOR MEDIAN SIGNS.

RAISED MEDIAN LEFT TURN BAY	Langley City THE PLACE TO BE	DRAWN Dec 2019
		REVISED
		SCALE N.T.S.
		SS-R25

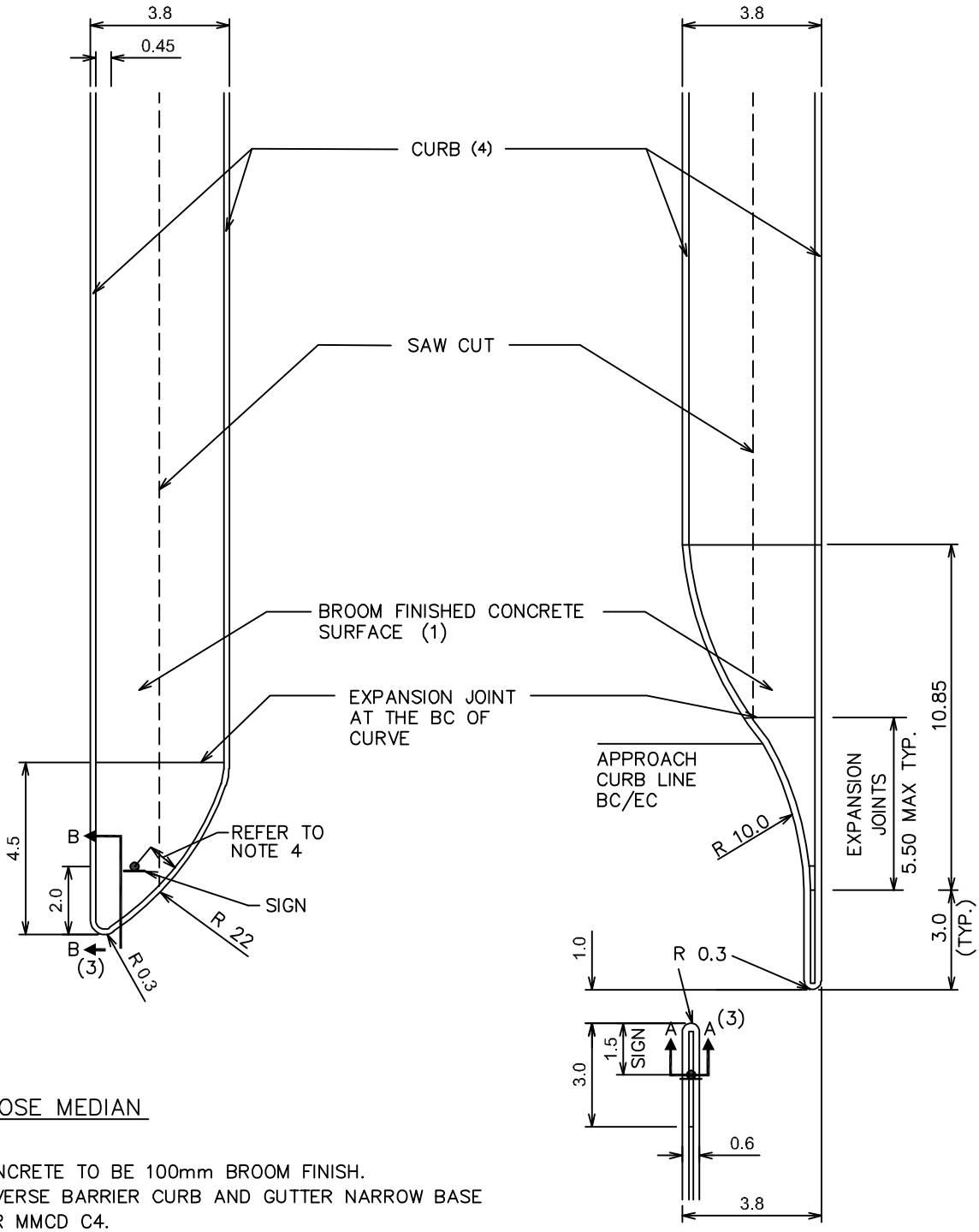

BULL NOSE MEDIAN

RESTRICTED LEFT-IN MEDIAN

NOTES:

1. CONCRETE TO BE 100mm BROOM FINISH.
2. REVERSE BARRIER CURB AND GUTTER NARROW BASE PER MMCD C4.
3. FOR SECTIONS A-A AND B-B SEE SS-R27.
4. SIGN POST TO BE 0.8m OFFSET FROM APPROACH FACING CURB.

RAISED MEDIAN END TREATMENT	Langley City THE PLACE TO BE	DRAWN Dec 2019
		REVISED
		SCALE N.T.S.
		SS-R26

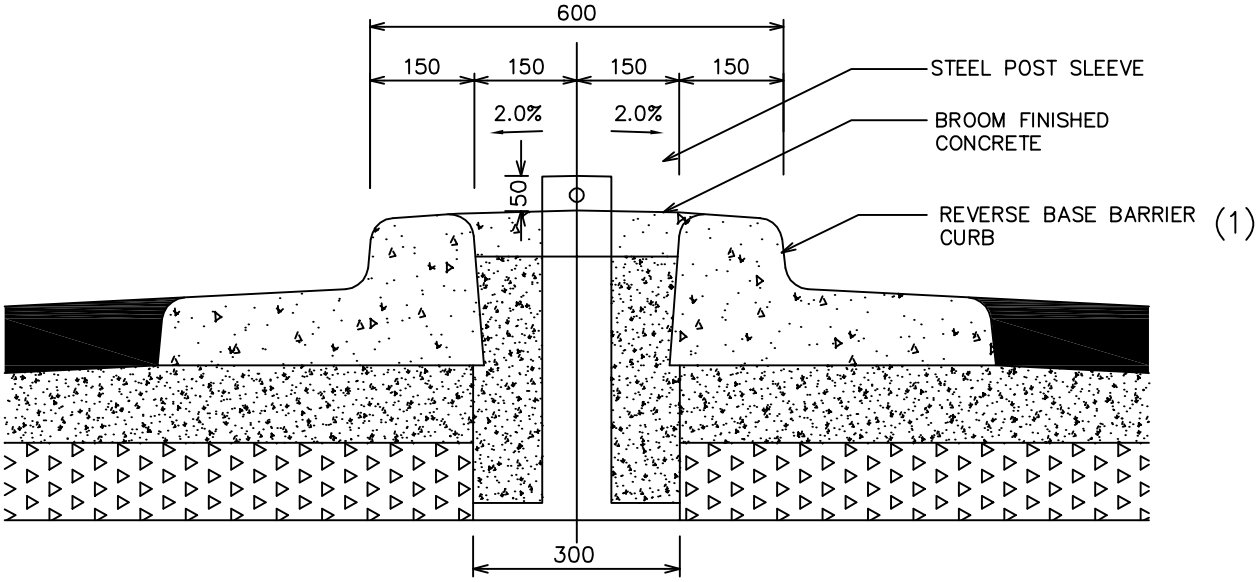

SECTION A–A

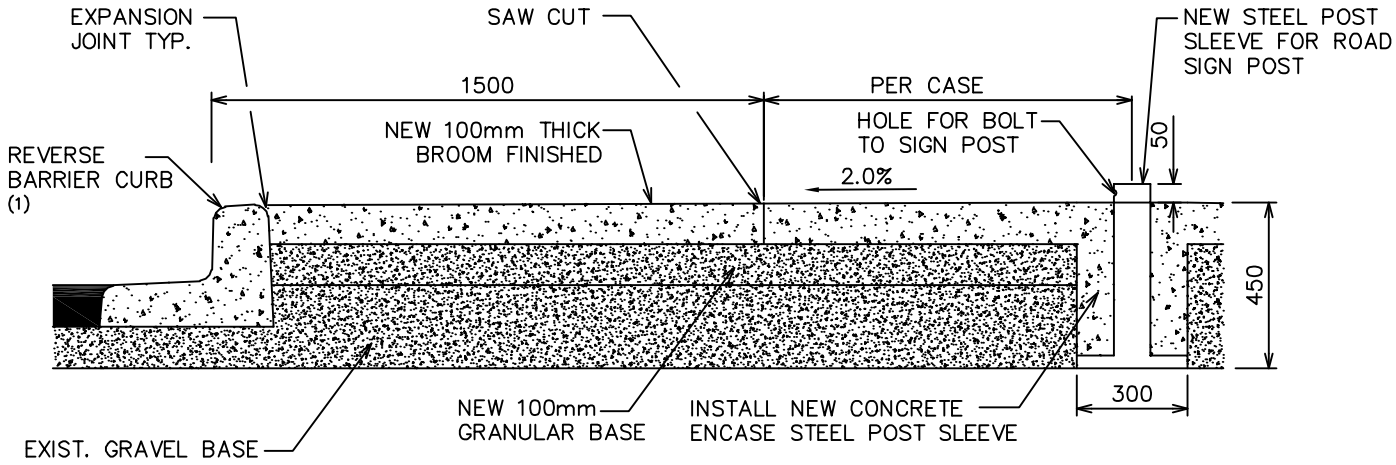

SECTION B–B

NOTE: (1) CURB AND GUTTER TO BE NARROW BASE BARRIER CURB AS PER MMCD DWG C4

RAISED MEDIAN BULL NOSE END BARRIER CURB TREATMENT	Langley City THE PLACE TO BE	DRAWN Dec 2019
		REVISED
		SCALE N.T.S.
		SS-R27

BIKE RACK DETAIL

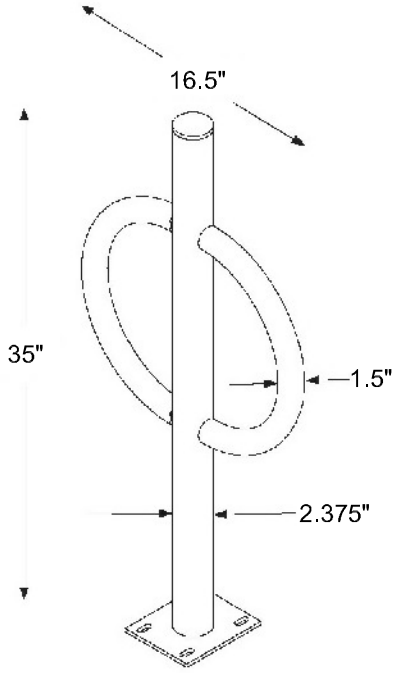

BIKE RACK MOUNTING

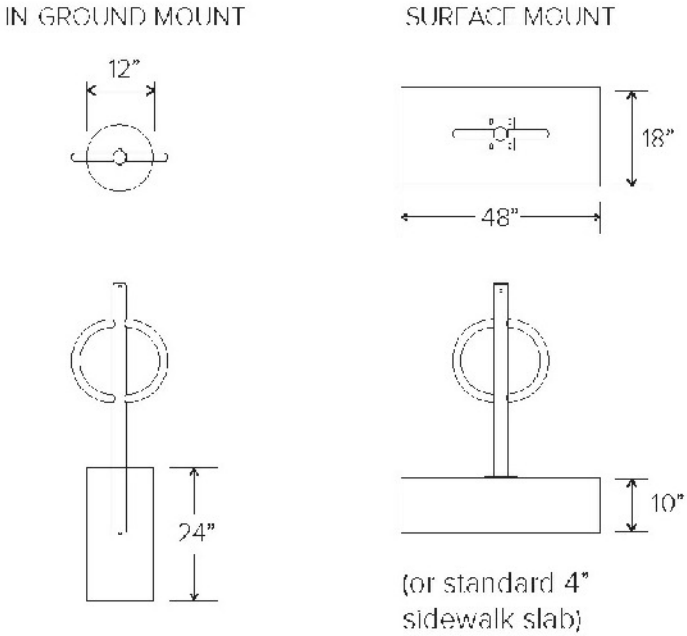

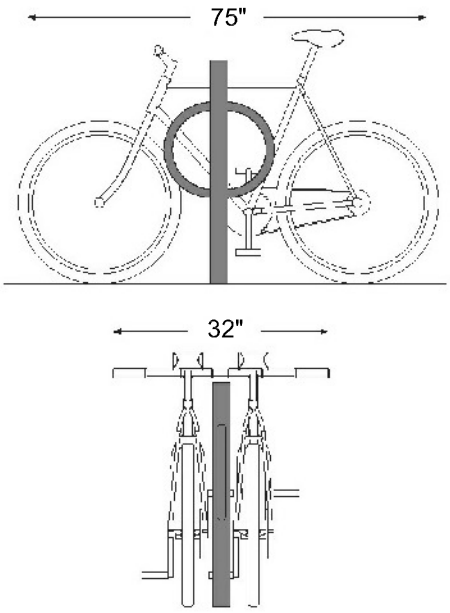

MULTIPLE BIKE RACK CONFIGURATION

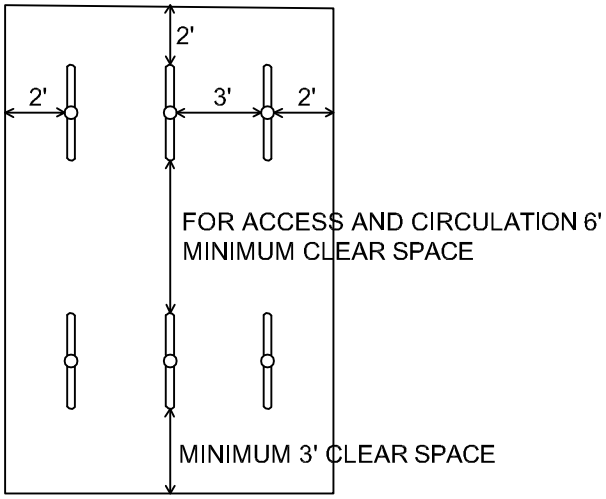

NOTE:
PRODUCT TO BE DERO "BIKE HITCH" POWDER COAT "BLACK" OR CITY APPROVED EQUIVALENT.

BIKE RACKS	Langley City THE PLACE TO BE	DRAWN Dec 2019
		REVISED
		SCALE N.T.S.
		SS-R28

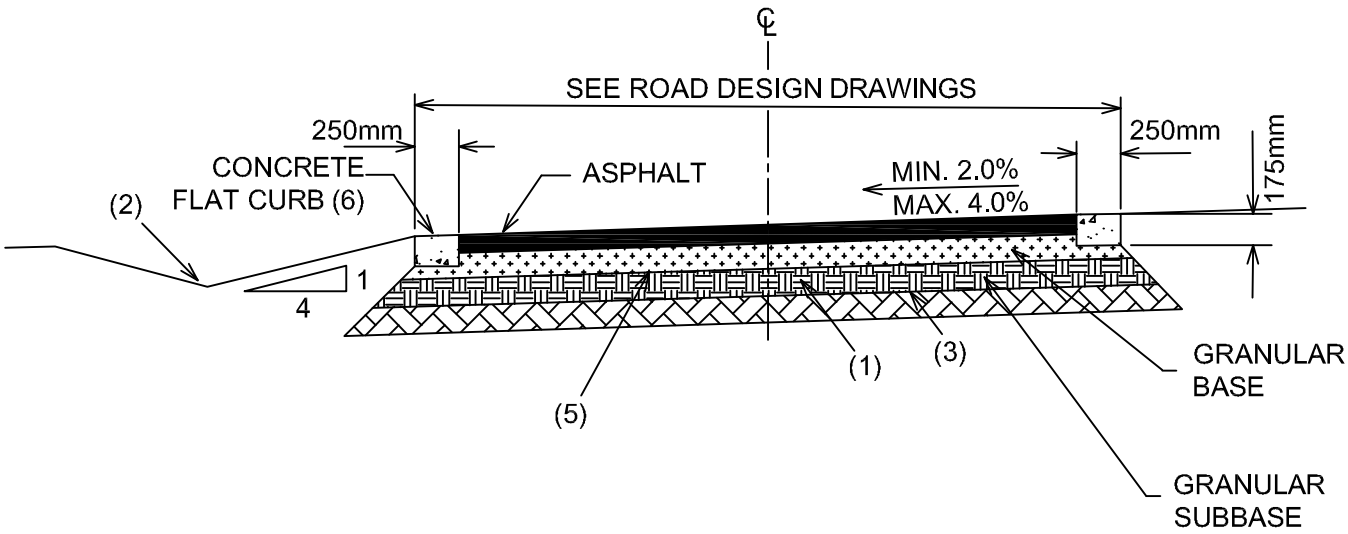

PATHWAY WITH CURB

Material	Minimum Thickness (mm)
Hot Mix Asphalt Surface (Upper Course #2)	75
19 mm Minus Crushed Gravel Base (CGB)	100
75 mm Minus Select Granular Subbase (SGSB)	250

NOTES:

1. STRIPPING ZONE - STRIPPING DEPTH TO BE VARIABLE AND BASED ON ENGINEER'S RECOMMENDATIONS ON SITE. REPLACE WITH GRANULAR SUBBASE (75mm MINUS) TO 250mm DEPTH AND 75mm PIT-RUN BEYOND, COMPACTED TO 95% MODIFIED PROCTOR DENSITY.
2. DITCH (0.25m MIN. DEPTH TYP.) EXISTING TOPSOIL TO BE HYDROSEEDED.
3. GEOTEXTILE (NILEX No. 4545 OR EQUIVALENT).
4. SHOULDERS TO CONSIST OF PREVIOUSLY STRIPPED TOPSOIL (HYDROSEEDED) OR 450mm TOPSOIL AND SOD.
5. 4mm BLACK POLYETHYLENE SHEET.
6. EXPANSION AND CONTRACTION JOINTS AS PER MMCD C3.

PATHWAYS, MULTI-USE SECTION DETAILS	Langley City THE PLACE TO BE	DRAWN Jul 2021
		REVISED
		SCALE N.T.S.
		SS-R29

SANITARY SEWER DESIGN TABLE

Project: _____

Date: _____

Designed By: _____

Checked By: _____

Sheet ___ of _____

City File No.: _____

Langley City
THE PLACE TO BE

SANITARY SEWER LOCATION			CATCHMENT AREA		LAND USE & POPULATION			SEWAGE FLOWS				CUMULATIVE			PEAK FLOWS			PIPE DESIGN DATA									HGL			COMMENTS
			Area					ADWF		Inflow & infiltration																				
Sub-catchment Name (in refrence to the submitted drawings)	From MH#	To MH#	Incr.	Total	Land Use	No. of Units	Population	Rate	Flow	Rate	Flow	ΣPopulation	ΣADWF	ΣI&I	Peaking factor	Flow (l/day)	Total Flow	Mann. Coef. n	Slope S	Req. Diam. ε	Design Pipe Size D	Pipe Design Criteria d/D	Hyd. Radius R	Design Cap. Q_{cap}	Flow Vel. using "Total Flow" through Design Pipe size D	Pipe length L	HGL SLOPE	U/S End Elev.	D/S End Elev.	
			(ha)	(ha)				(l/day/cap)	(l/day)	(l/ha/day)	(l/day)						(m^3/s)		(%)	(mm)	(mm)		(m)	(m^3/s)	(m/s)	(m)	(%)	(m)	(m)	

* - Electronic copy of this table is available at the City upon request.

SANITARY SEWER DESIGN TABLE

Langley City
THE PLACE TO BE

DRAWN Dec 2019

REVISED

SCALE N.T.S.

SS-S01

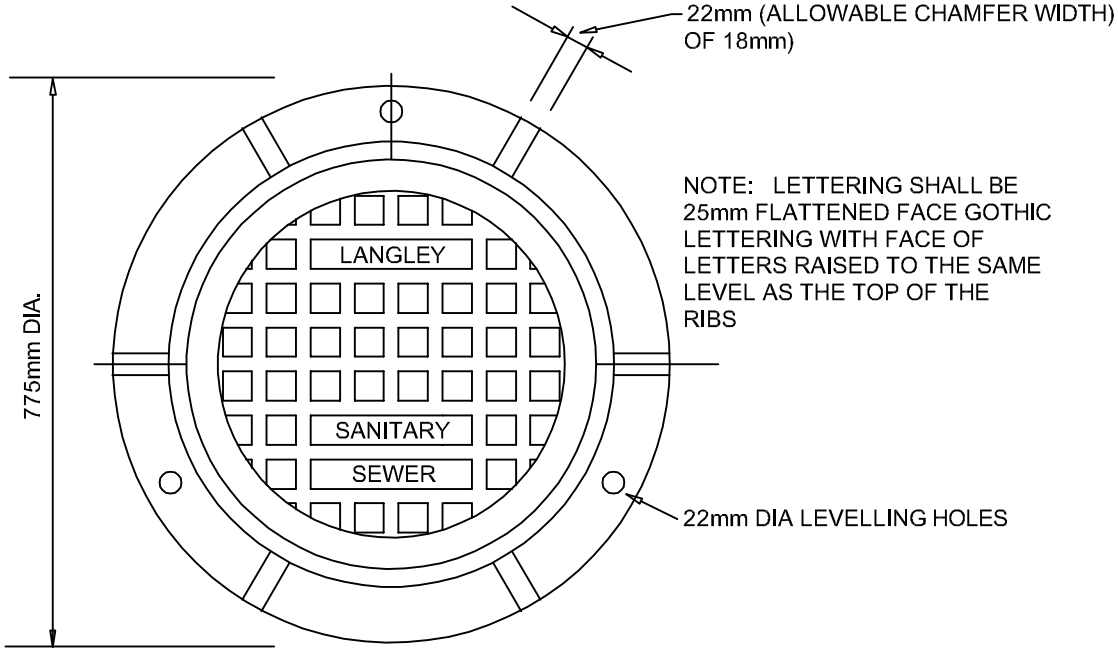

PLAN

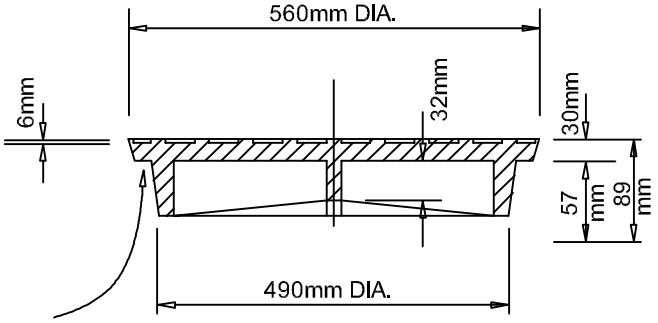

COVER

MACHINE SURFACE FOR NON ROCKING FIT IN ALL POSITIONS. ALLOW 2mm RAISED FACE IN CASTING FOR MACHINING.

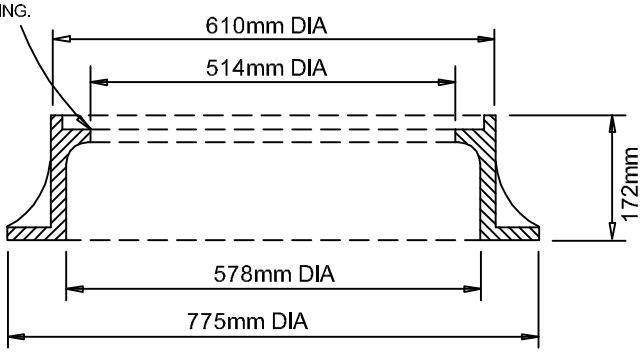

FRAME

TYPE - DOBNEY FOUNDRY NO. C-18
"TR" CASTINGS OR "K" EQUIVALENT.

APPROXIMATE WEIGHTS
COVER - 66 kg
FRAME - 90 kg

SANITARY SEWER MANHOLE COVER & FRAME	Langley City THE PLACE TO BE	DRAWN Dec 2019
		REVISED
		SCALE N.T.S.
		SS-S02

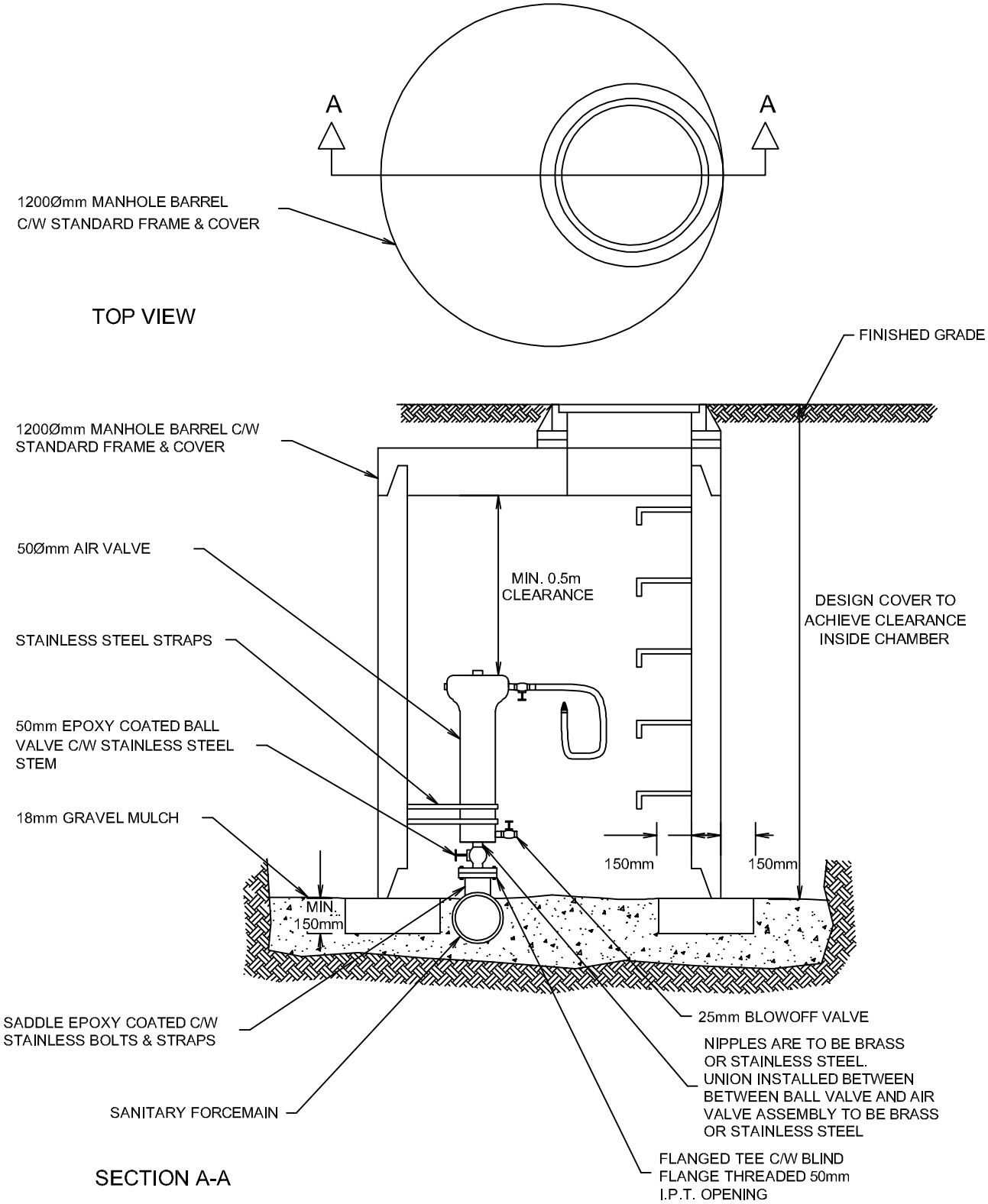

NOTE:

AIR VALVE SHALL BE D-025 L COMBINATION AIR VALVE MANUFACTURED BY A.R.I. OR CITY APPROVED EQUIVALENT.

TYPICAL AIR VALVE OR AIR VACUUM INSTALLATION ON SANITARY FORCEMAINS	Langley City THE PLACE TO BE	DRAWN Dec 2019
		REVISED
		SCALE N.T.S.
		SS-S03

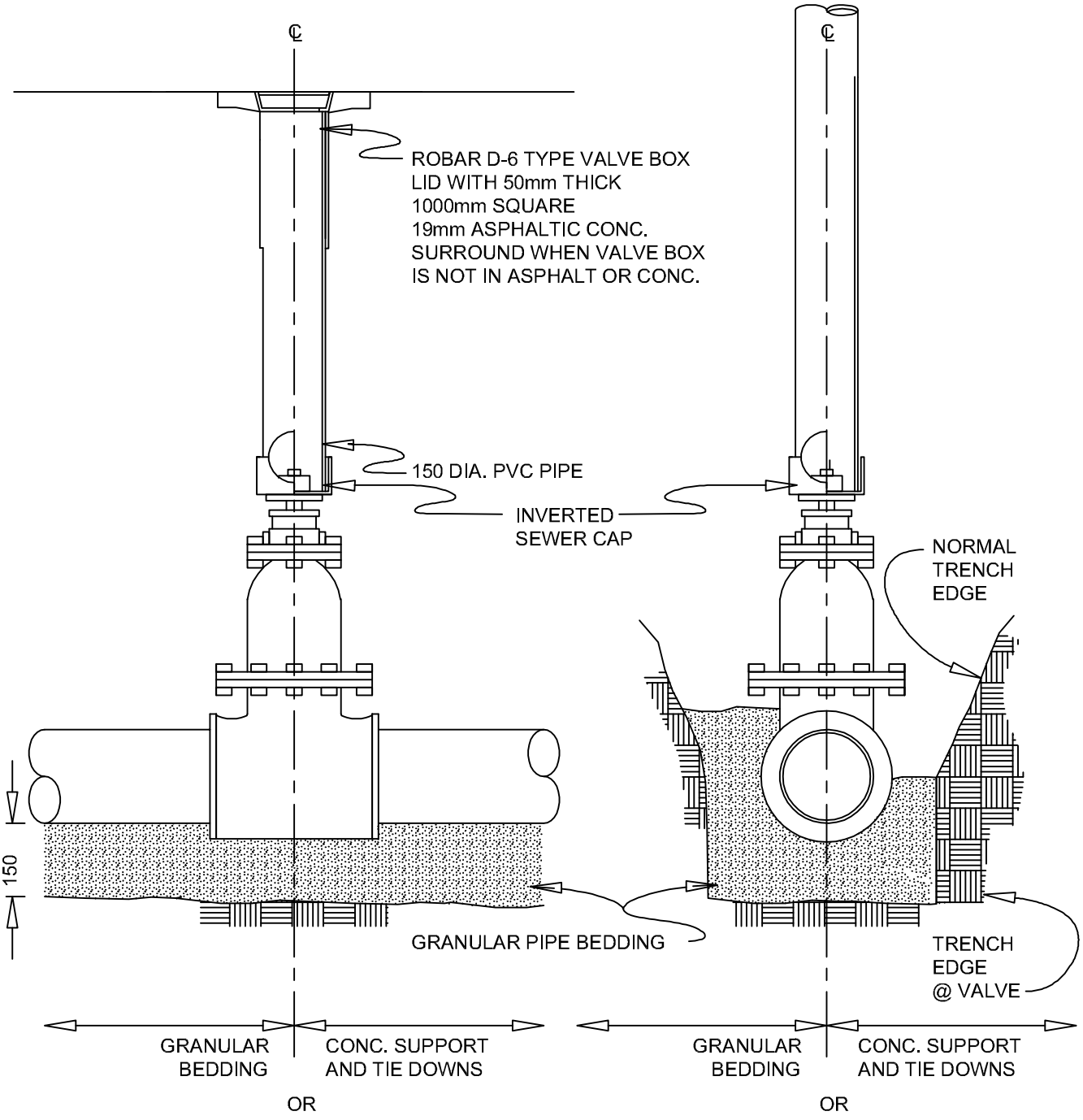

TYPICAL GATE VALVE INSTALLATION FOR SANITARY FORCEMAINS

Langley City
THE PLACE TO BE

DRAWN	Dec 2019
REVISED	
SCALE	N.T.S.
	SS-S04

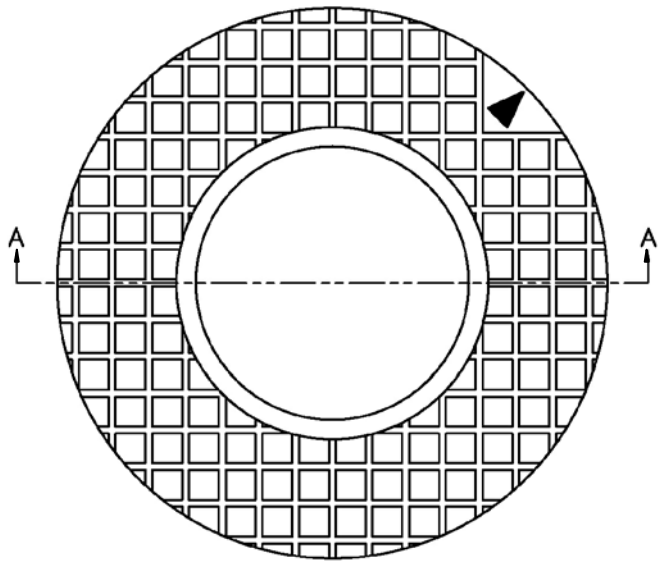

TOP VIEW OF VALVE BOX (w/o LID)

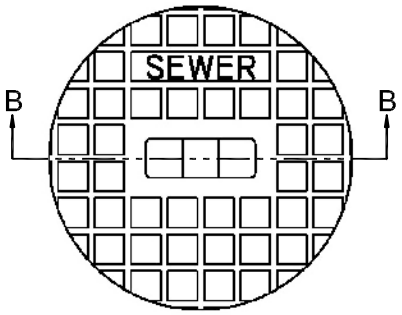

TOP VIEW OF VALVE LID

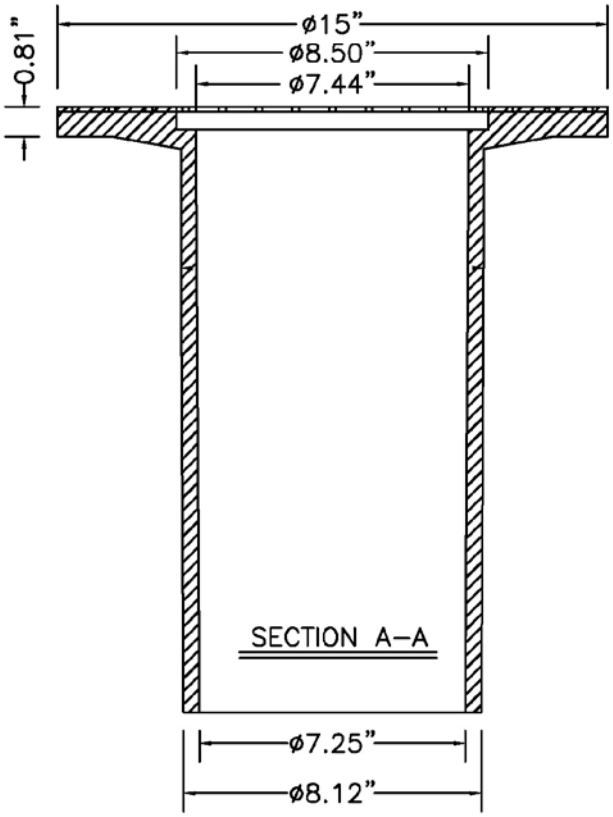

ELEVATION/SECTION

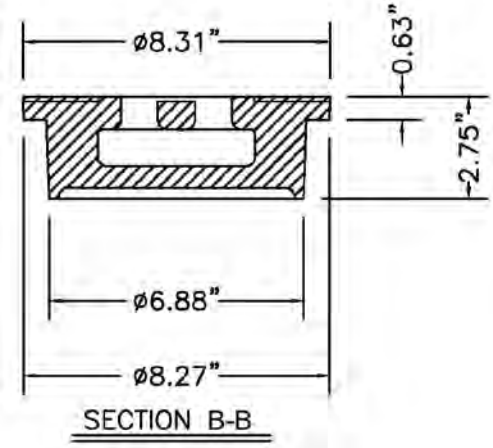

LID SECTION

NOTE: ROBAR D-6 OR CITY APPROVED EQUIVALENT

ROBAR VALVE BOX AND LID FOR SANITARY FORCEMAIN VALVES	Langley City THE PLACE TO BE	DRAWN Jan 2021
		REVISED
		SCALE N.T.S.
		SS-S05

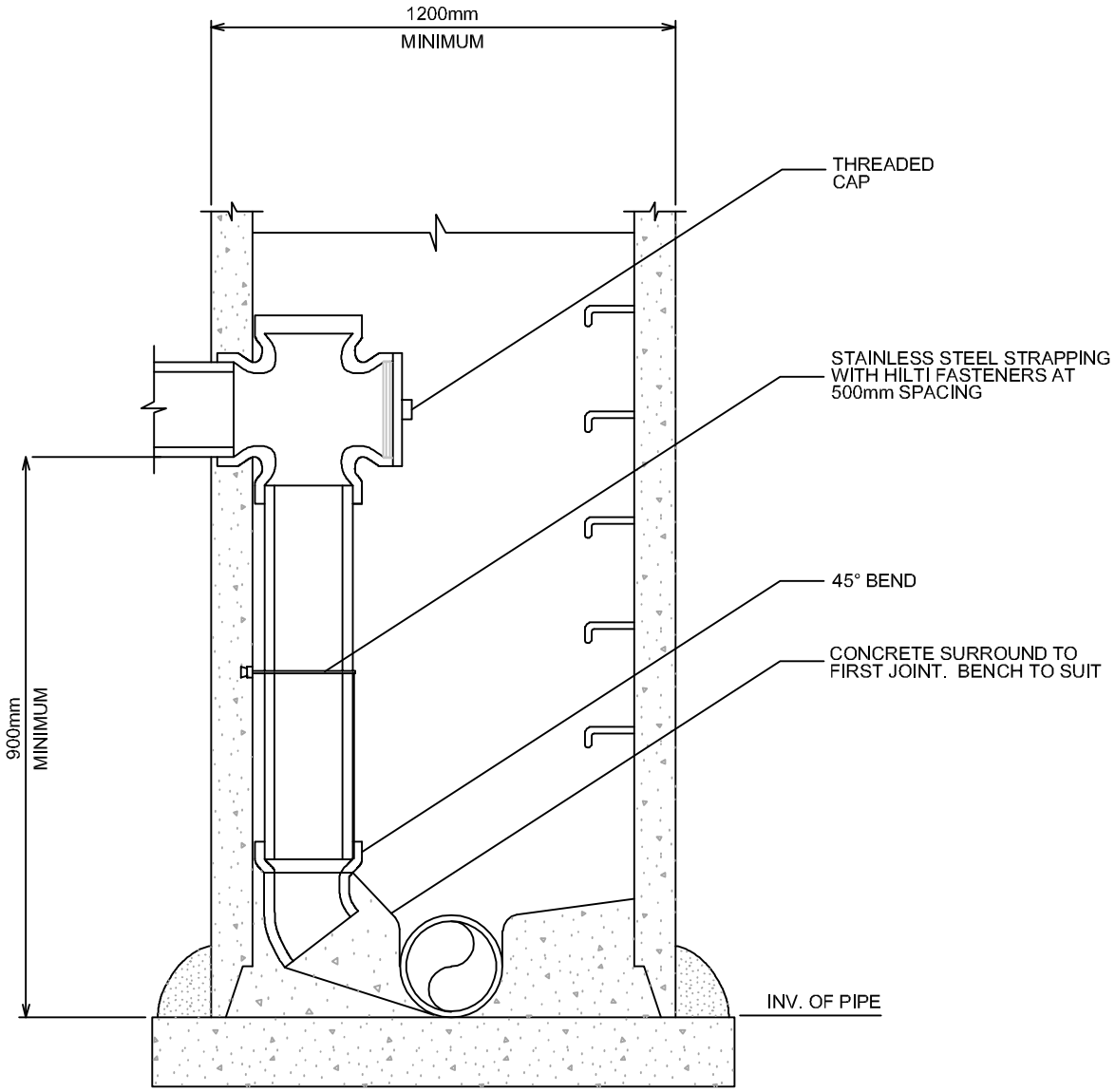

NOTE

1. INSIDE DROP TO BE USED ONLY WHERE SPECIFIED BY THE CITY ENGINEER
2. ALL INSIDE PIPE AND FITTINGS TO BE PVC DR28/35

INSIDE DROP MANHOLE (REPLACES MMCD-S4)	Langley City THE PLACE TO BE	DRAWN Dec 2019
		REVISED
		SCALE NTS
		SS-S06

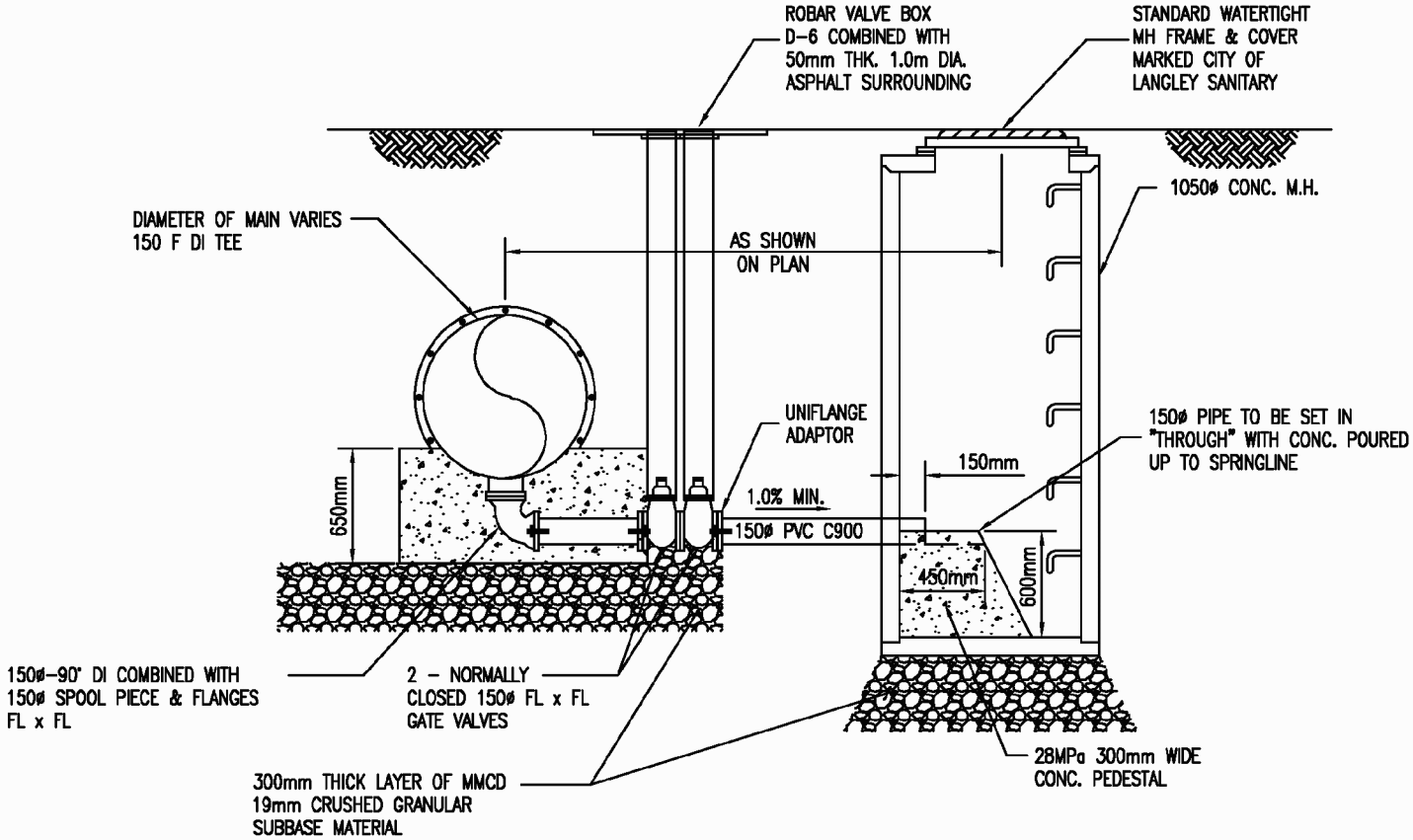

SANITARY BLOW DOWN ASSEMBLY	Langley City THE PLACE TO BE	DRAWN Dec 2019
		REVISED
		SCALE N.T.S.
		SS-S07

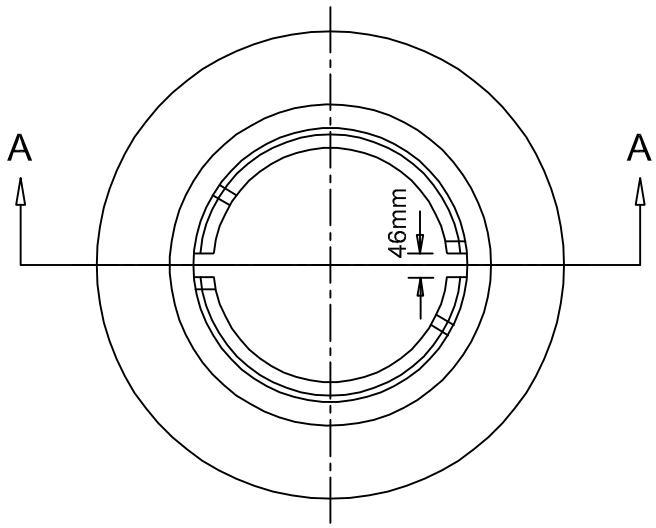

TOP VIEW OF BOX (w/o LID)

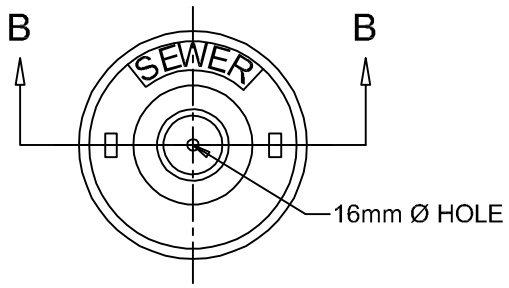

TOP VIEW OF LID

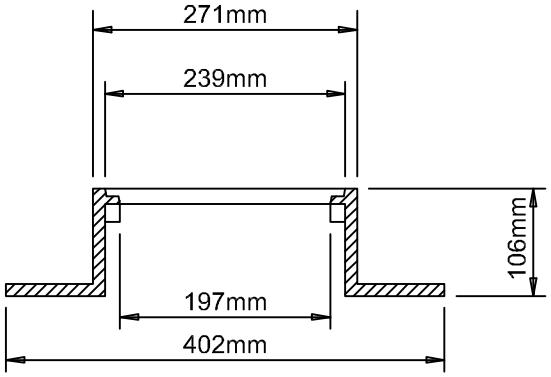

ELEVATION/SECTION A-A

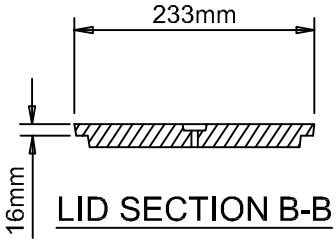

LID SECTION B-B

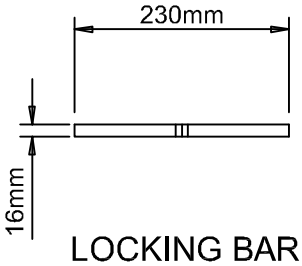

LOCKING BAR

TYPE - DOBNEY FOUNDRY NO. D-14A

APPROX. WT: 27kg

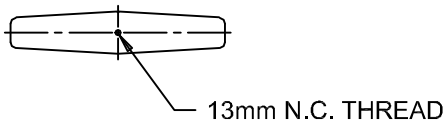

200Ø INSPECTION CHAMBER & CLEAN OUT LID AND FRAME	Langley City THE PLACE TO BE	DRAWN Dec 2019
		REVISED
		SCALE N.T.S.
		SS-S08

TYPICAL SANITARY PUMP STATION

ITEM	DESCRIPTION	QUANTITY
1	USF FABRICATION CUSTOM ALUMINUM HATCH SAFETY GRATING, STAINLESS STEEL HOLD OPEN MECHANISM, LIFT ASSISTANT, STAINLESS STEEL TAMPER PROOF HINGES, RECESSED LOCKBOX FOR PADLOCK, AND BITUMINOUS SEALANT WHERE FRAME MEETS CONCRETE	1
2	100Ø SCH. 10 STAINLESS STEEL PIPE	1
3	UNIFIED ALLOYS-100Ø ALUMINUM GOOSENECK VENT PIPE C/W 180° LONG RADIUS BEND C/W ALUMINUM DEBRIS SCREEN. PRIMED AND PAINTED BLACK.	1
4	MARINE GRADE ALUMINUM HEAVY DUTY ACCESS LADDER C/W USF SAFETY EXTENSIONS. CONTRACTOR TO PROVIDE SHOP DRAWINGS FOR REVIEW & APPROVAL	1
5	CUSTOM STAINLESS STEEL SEDIMENTATOR HOOD FOR ACCESS TO GRAVITY SEWER. CONTRACTOR TO PROVIDE SHOP DRAWINGS FOR REVIEW & APPROVAL	1
6	UNIFIED ALLOYS STAINLESS STEEL PIPE C/W THREE (3) STAINLESS STEEL BRACKETS EQUALLY SPACED FROM DISCHARGE ELBOW TO 90° ELBOW (FL X FL)	3
7	UNIFIED ALLOYS STAINLESS STEEL LONG RADIUS 90° BEND (FL X WELD)	2
8	UNIFIED ALLOYS STAINLESS STEEL TEE (WELD X WELD X WELD)	1
9	UNIFIED ALLOYS STAINLESS STEEL PIPE C/W 50mm NPT PORT (WELD X PE)	1
10	25mm STAINLESS STEEL BALL VALVE	3
11	ALUMINUM PLATFORM C/W OPENINGS FOR PUMPS, ENTRY AND MIXER AND 4 x GRADE 30 GALVANIZED STEEL CHAINS FOR OPENINGS FOR PUMP STATION HATCH	1

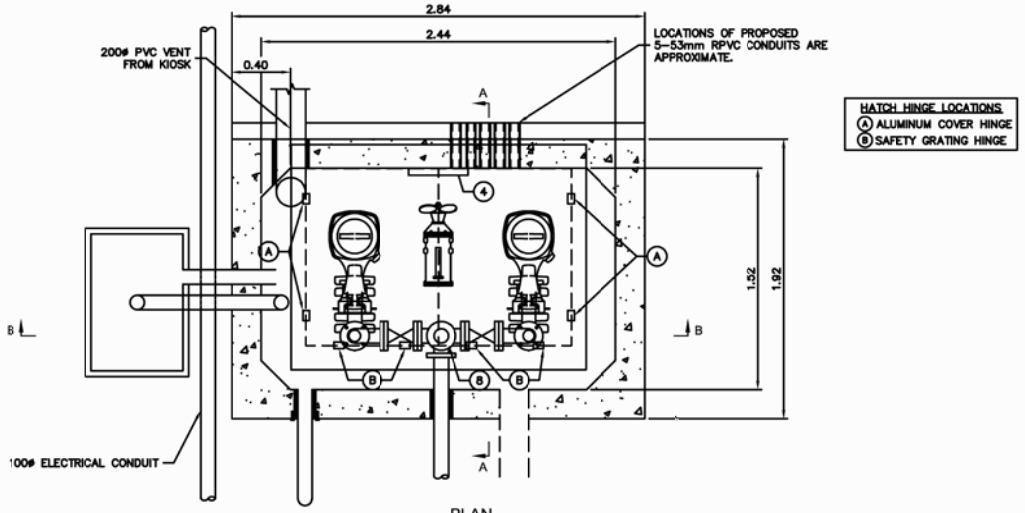

PLAN
1:20

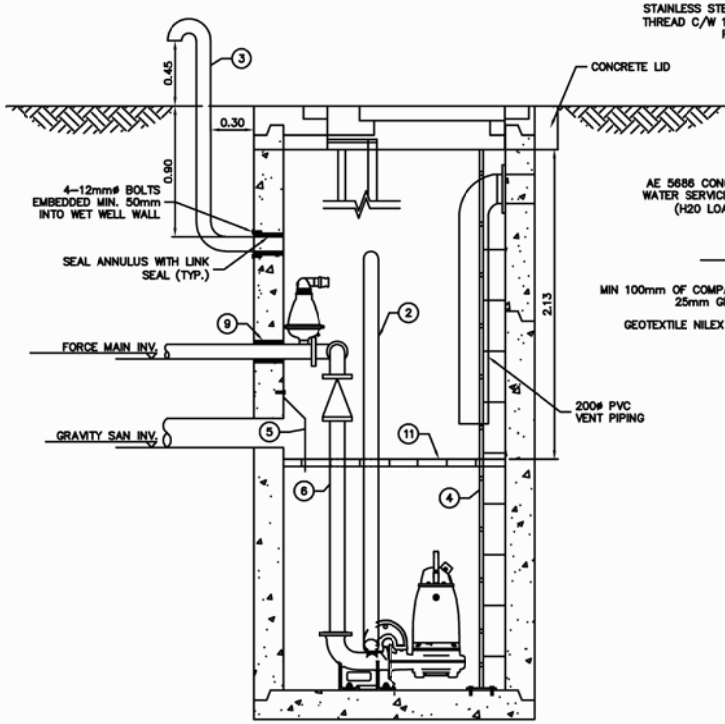

SECTION A-A

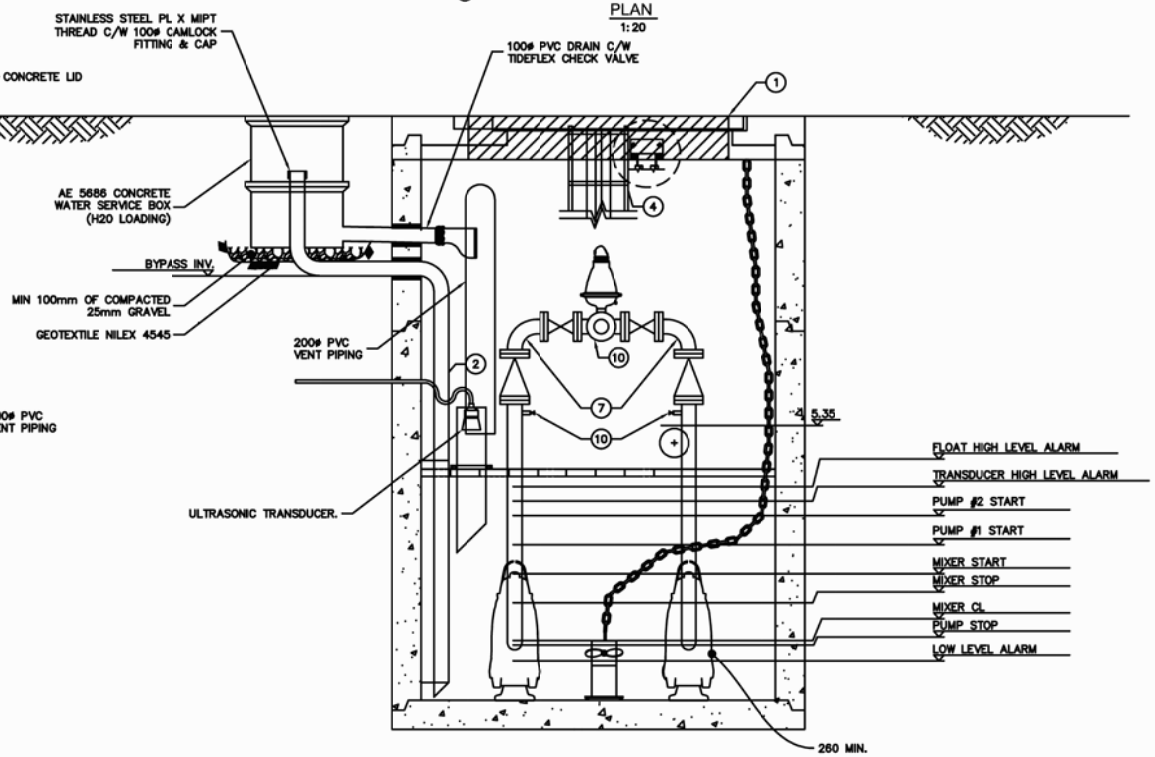

SECTION B-B

Langley City
THE PLACE TO BE

DRAWN Dec 2019
REVISED
SCALE N.T.S.

SS-S09

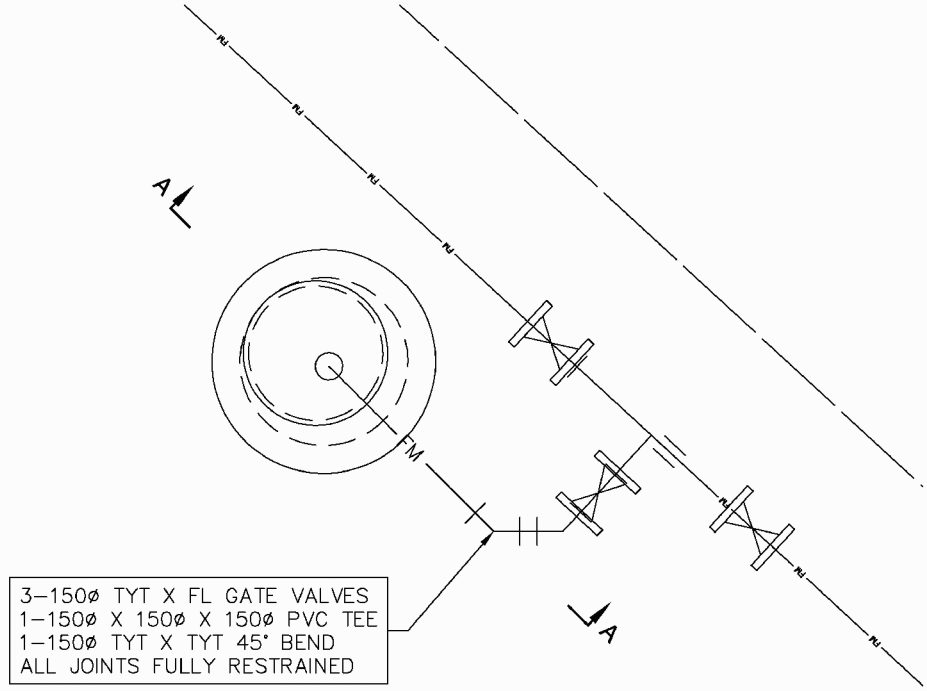

A
—

BYPASS INLET DETAIL

1:20

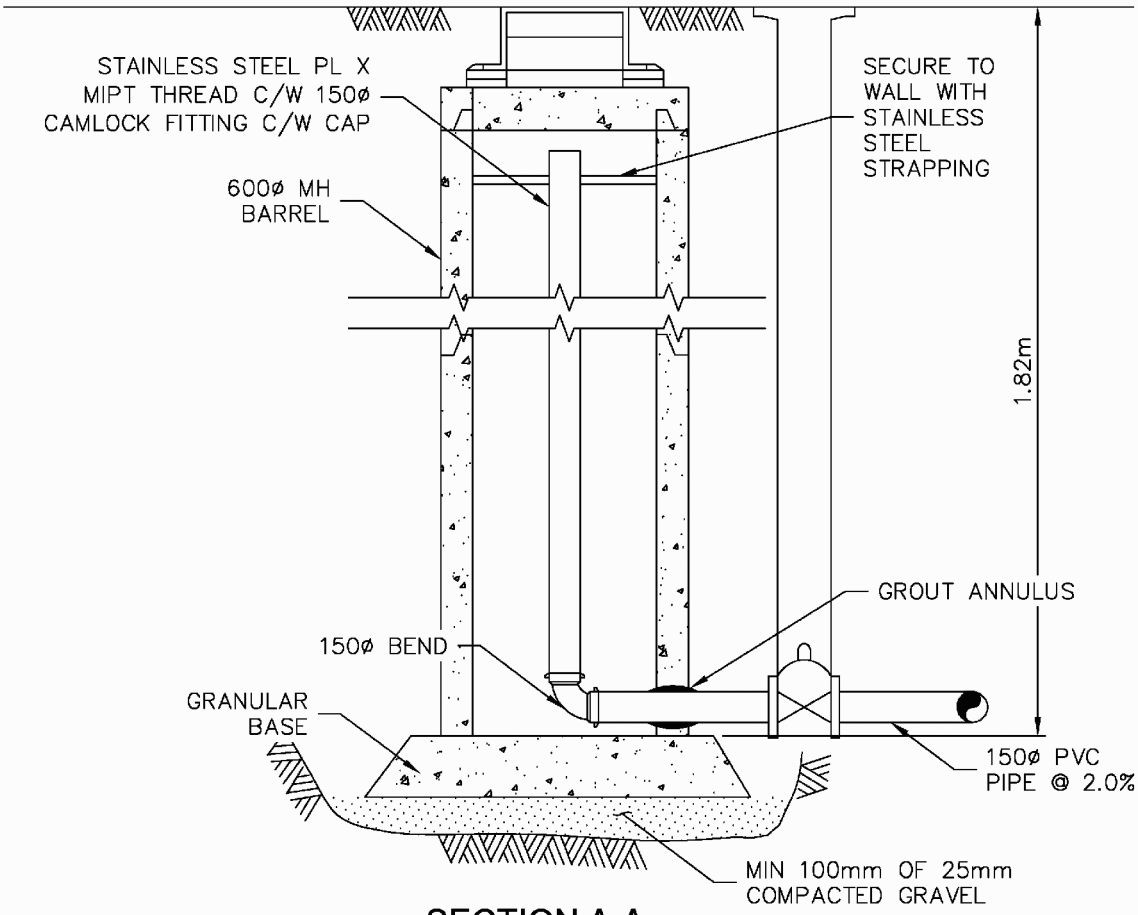

SECTION A-A

N.T.S.

PUMPING PORT TO SANITARY FORCE MAIN	Langley City THE PLACE TO BE	DRAWN Dec 2019
		REVISED
		SCALE N.T.S.
		SS-S10

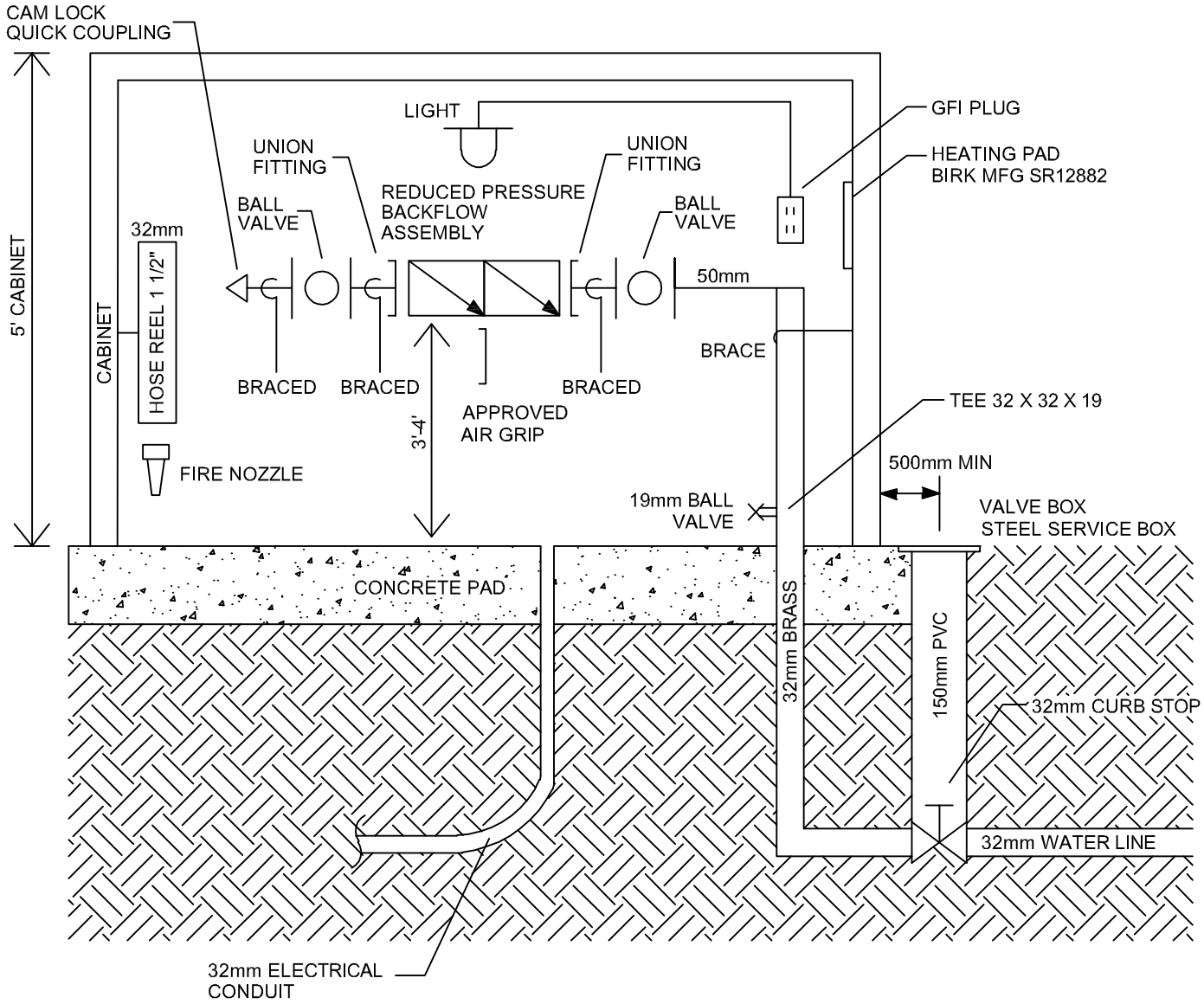

NOTE: VALID MANUFACTURING LTD
KIOSK KSDA48-36-22-01
INSULATED OR APPROVED EQUAL

PROPOSED SANITARY PUMP STATION WATER SERVICE CABINET	Langley City THE PLACE TO BE	DRAWN Dec 2019
		REVISED
		SCALE N.T.S.
		SS-S11

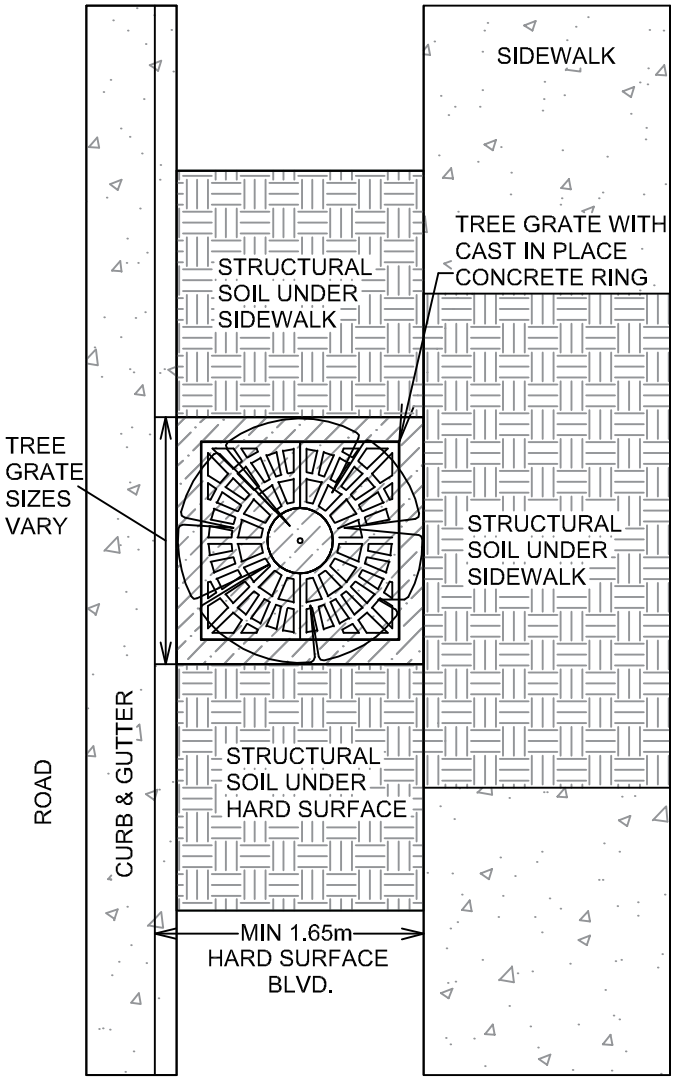

TREE GRATES IN HARD SURFACE BLVDS.

(SEE SECTION SS-TP03)

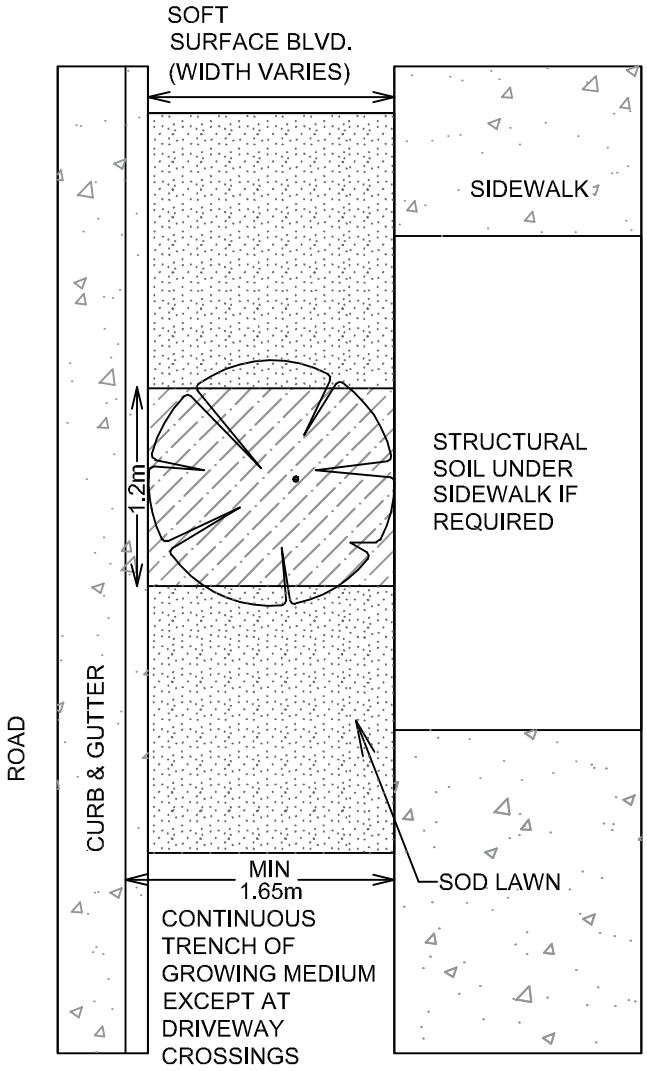

FOR SOFT SURFACE BLVDS.

(SEE SECTION SS-TP02)

NOTES:

1) REFER TO LANDSCAPE PLANS FOR STRUCTURAL SOIL LOCATIONS AND DIMENSIONS.
2) 50mm DEPTH x 1.2m LENGTH x BOULEVARD WIDTH OF COMPOSTED BARK MULCH AROUND EACH TREE. SEE SS-TP02 AND SS-TP03 FOR DETAILS.
3) FOR BOULEVARDS THAT ARE GREATER THAN 2.2m WIDE, A SOD STRIP CAN BE PLACED ON EITHER END OF THE TREE INSTEAD OF BARK MULCH.

TREE PLANTING LAYOUT WITH STRUCTURAL SOIL - SOFT & HARD SURFACE BLVDS.

Langley City
THE PLACE TO BE

DRAWN	Dec 2019
REVISED	
SCALE	N.T.S.
	SS-TP01

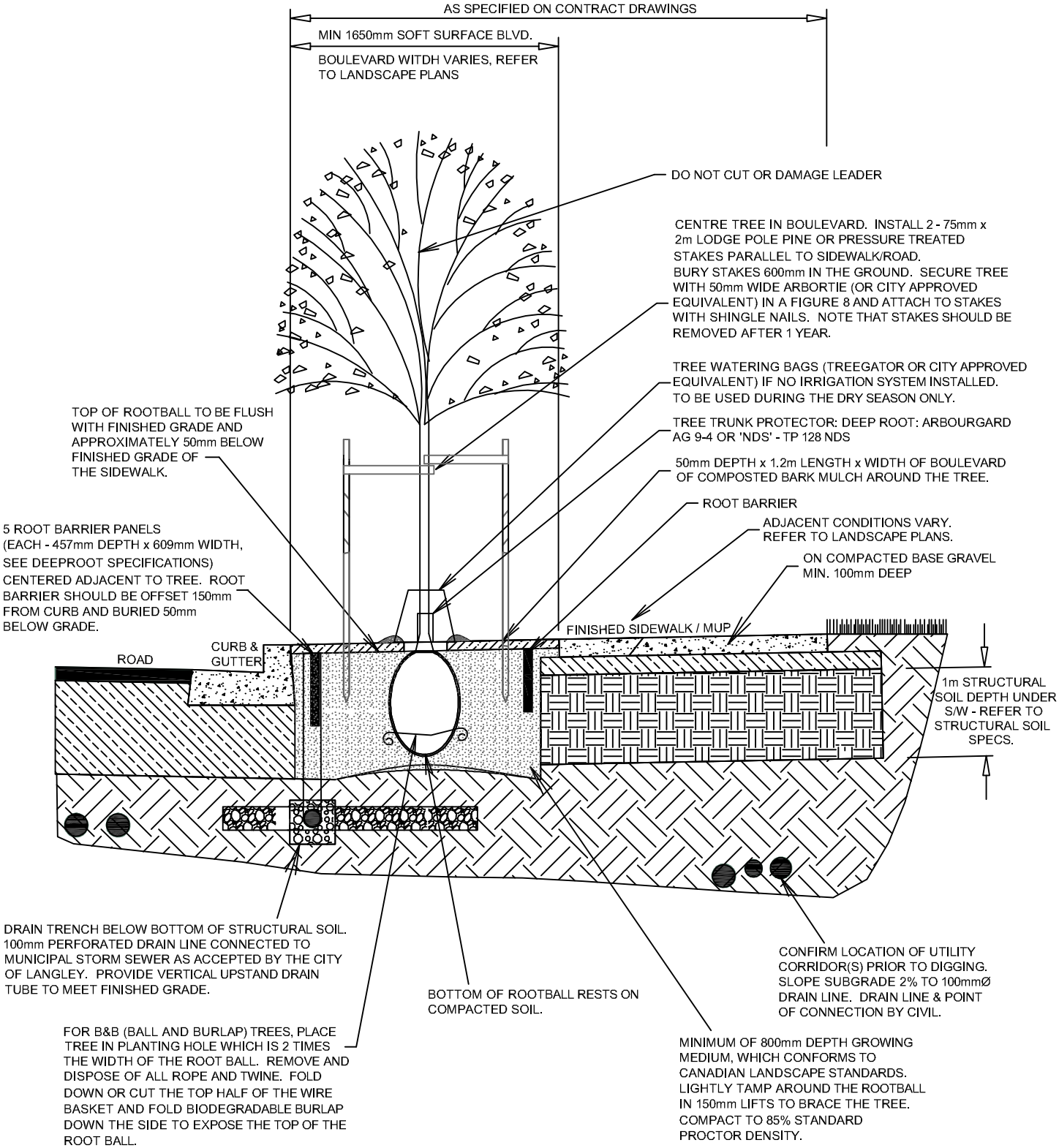

NOTES:

1) CONTACT CITY ENGINEER TO REVIEW PLANTING HOLE EXCAVATION PRIOR TO INSTALLATION OF TOPSOIL AND TREE
2) ALL TREES SHALL BE WATERED WITH TREE WATERING BAGS FOR TWO (2) GROWING SEASONS. TREE WATERING BAGS SHALL BE FILLED WITH WATER ONCE EVERY SEVEN (7) DAYS DURING THE DRY SEASON ONLY UNLESS STATED OTHERWISE BY CONTRACT. CONTRACTOR IS RESPONSIBLE TO REPLACE DAMAGED OR VANDALIZED TREE WATERING BAGS. TREE WATERING BAGS TO BE REMOVED DURING THE RAINY SEASON. WATERING BAG TO BE USED FOR THE TREES UNTIL END OF MAINTENANCE PERIOD.
3) PROVIDE $10m^3$ GROWING MEDIUM PER TREE OR CITY APPROVED EQUIVALENT.
4) EXCAVATION OF THE SUBGRADE BELOW THE ROOTBALLS OF TREES SHALL ONLY BE NECESSARY TO PERMIT THE BOTTOM OF THE ROOTBALL TO SIT ON UNDISTURBED MATERIAL OR COMPACTED FILL SO THAT THE TOP OF THE ROOTBALL REMAINS AT THE PROPER FINISHED GRADE. DISTURBED SUBGRADE BELOW THE ROOTBALL SHALL BE COMPACTED TO PREVENT SETTLEMENT OF THE TREE.

TREE PLANTING WITH STRUCTURAL SOIL - SOFT SURFACE BLVDS.

Langley City
THE PLACE TO BE

DRAWN	Dec 2019
REVISED	
SCALE	N.T.S.
	SS-TP02

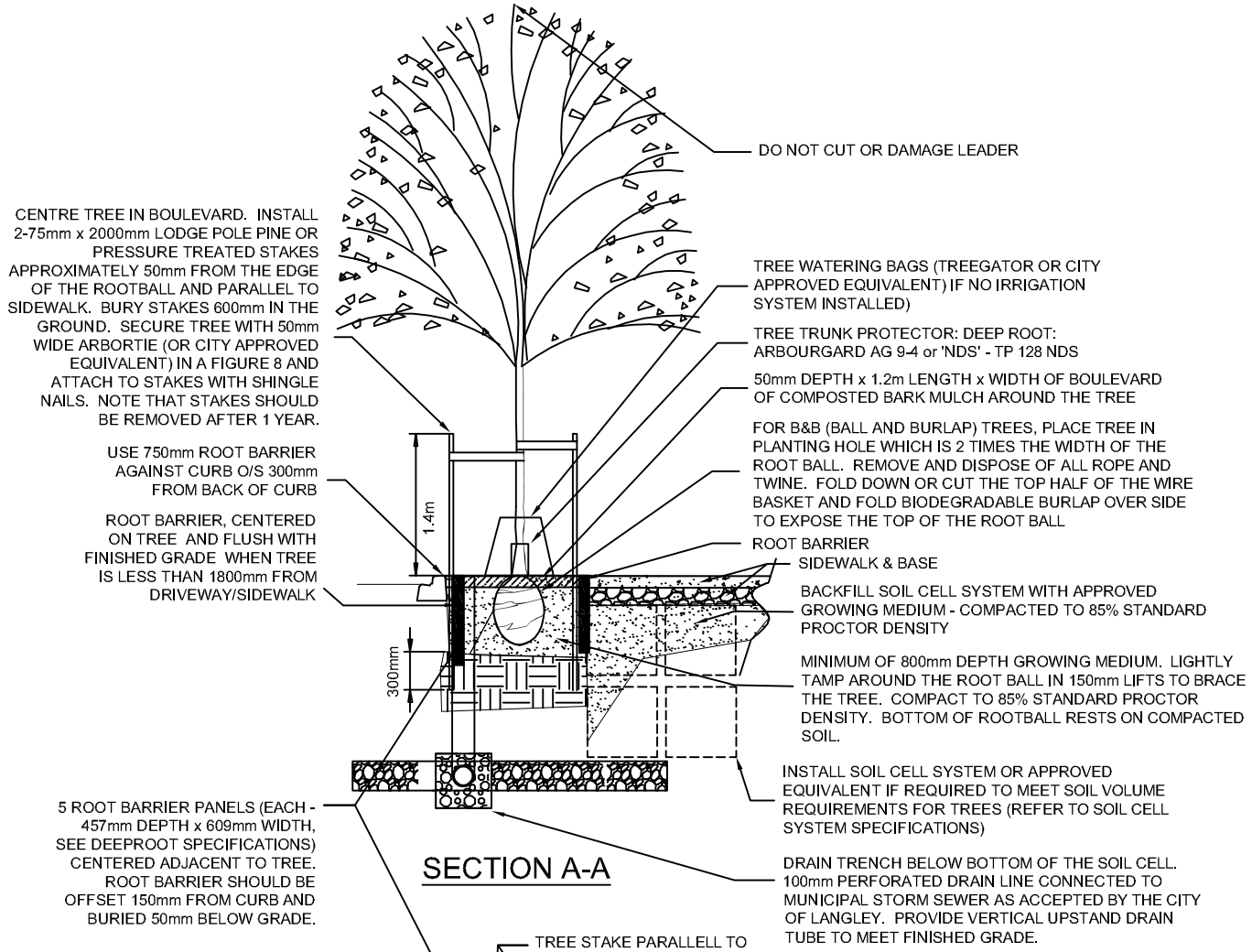

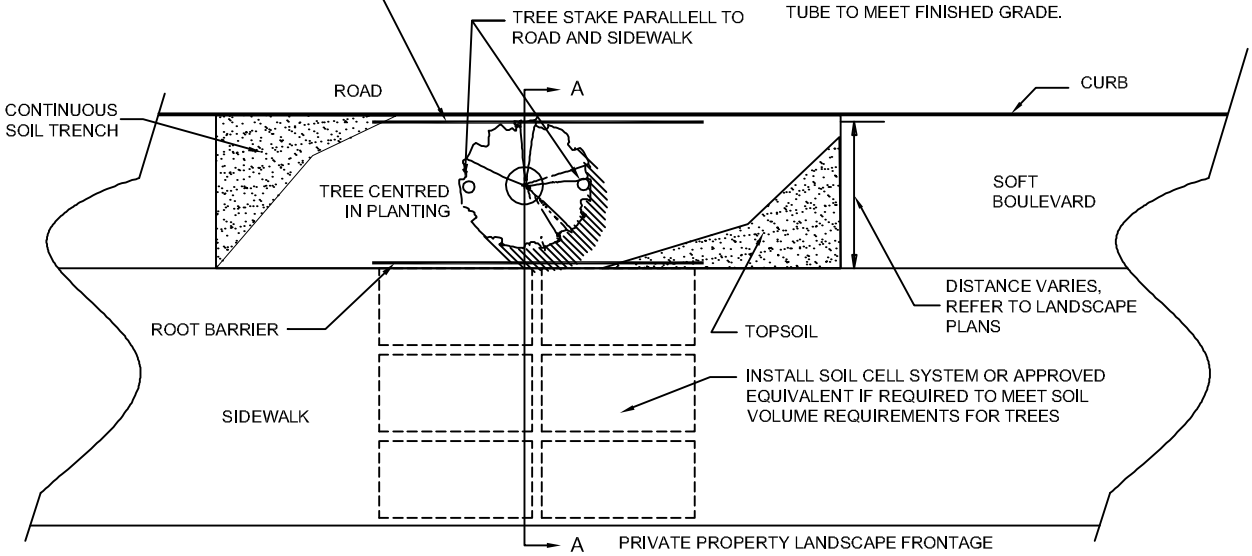

PLAN VIEW

NOTES:

1) CONTACT CITY ENGINEER TO REVIEW PLANTING HOLE EXCAVATION PRIOR TO INSTALLATION OF TOPSOIL AND TREE
2) ALL TREES SHALL BE WATERED WITH TREE WATERING BAGS FOR TWO (2) GROWING SEASONS. TREE WATERING BAGS SHALL BE FILLED WITH WATER ONCE EVERY SEVEN (7) DAYS DURING THE DRY SEASON ONLY UNLESS STATED OTHERWISE BY CONTRACT. CONTRACTOR IS RESPONSIBLE TO REPLACE DAMAGED OR VANDALIZED TREE WATERING BAGS. TREE WATERING BAGS TO BE REMOVED DURING THE RAINY SEASON. WATERING BAG TO BE USED FOR THE TREES UNTIL END OF MAINTENANCE PERIOD.
3) PROVIDE $10m^3$ GROWING MEDIUM PER TREE OR CITY APPROVED EQUIVALENT.
4) EXCAVATION OF THE SUBGRADE BELOW THE ROOTBALLS OF TREES SHALL ONLY BE NECESSARY TO PERMIT THE BOTTOM OF THE ROOTBALL TO SIT ON UNDISTURBED MATERIAL OR COMPACTED FILL SO THAT THE TOP OF THE ROOTBALL REMAINS AT THE PROPER FINISHED GRADE. DISTURBED SUBGRADE BELOW THE ROOTBALL SHALL BE COMPACTED TO PREVENT SETTLEMENT OF THE TREE.

TREE PLANTING WITH SOIL CELL SYSTEM - SOFT SURFACE BOULEVARDS

Langley City
THE PLACE TO BE

DRAWN	Dec 2019
REVISED	
SCALE	N.T.S.
	SS-TP02A

BOULEVARD WIDTH VARIES, REFER TO LANDSCAPE PLANS

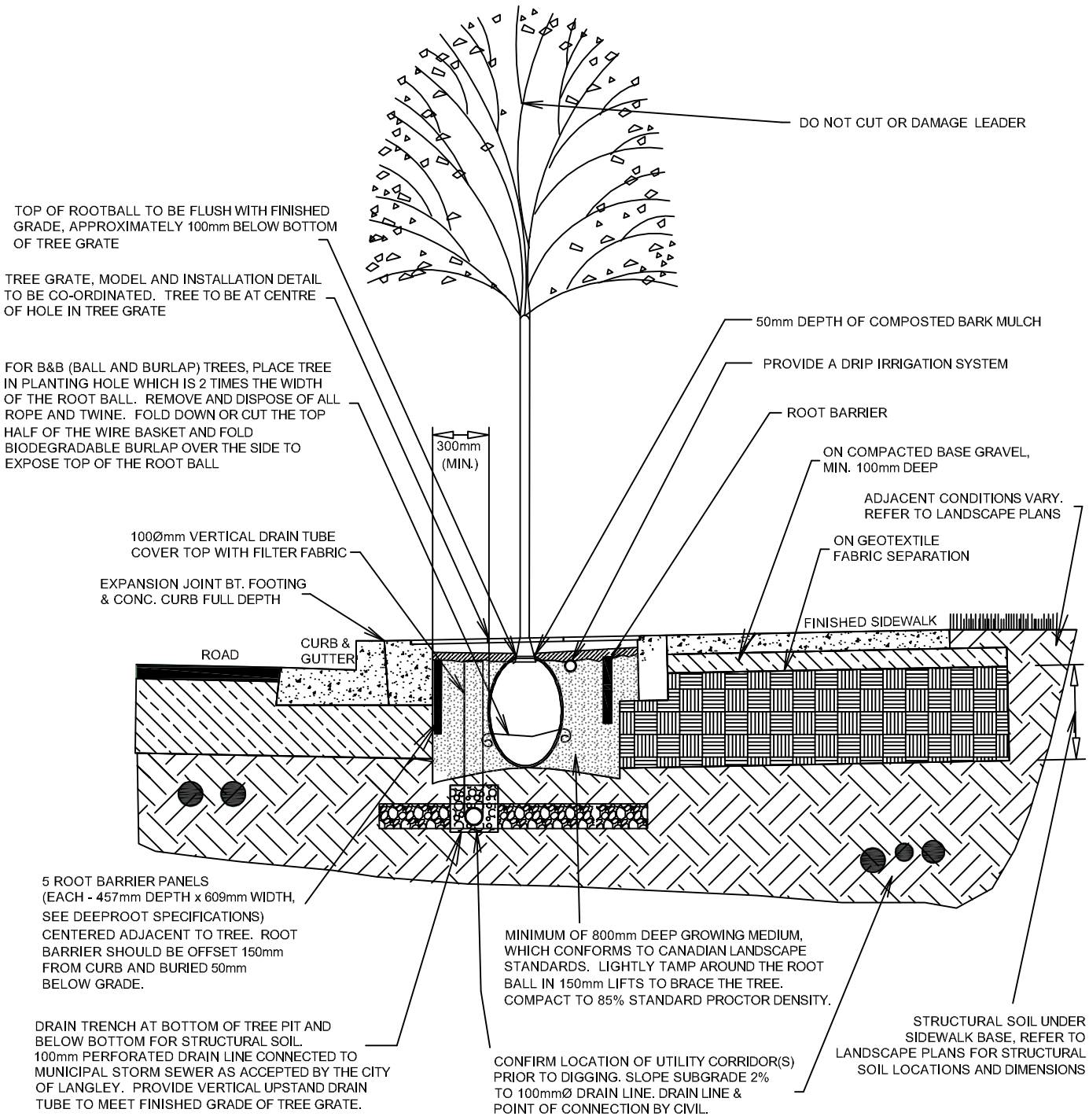

NOTES:

1) CONTACT CITY ENGINEER TO REVIEW PLANTING HOLE EXCAVATION PRIOR TO INSTALLATION OF TOPSOIL AND TREE
2) ALL TREES SHALL BE WATERED WITH TREE WATERING BAGS FOR TWO (2) GROWING SEASONS. TREE WATERING BAGS SHALL BE FILLED WITH WATER ONCE EVERY SEVEN (7) DAYS DURING THE DRY SEASON ONLY UNLESS STATED OTHERWISE BY CONTRACT. CONTRACTOR IS RESPONSIBLE TO REPLACE DAMAGED OR VANDALIZED TREE WATERING BAGS. TREE WATERING BAGS TO BE REMOVED DURING THE RAINY SEASON. WATERING BAG TO BE USED FOR THE TREES UNTIL END OF MAINTENANCE PERIOD.
3) PROVIDE 10m GROWING MEDIUM PER TREE OR CITY APPROVED EQUIVALENT.
4) EXCAVATION OF THE SUBGRADE BELOW THE ROOTBALLS OF TREES SHALL ONLY BE NECESSARY TO PERMIT THE BOTTOM OF THE ROOTBALL TO SIT ON UNDISTURBED MATERIAL OR COMPACTED FILL SO THAT THE TOP OF THE ROOTBALL REMAINS AT THE PROPER FINISHED GRADE. DISTURBED SUBGRADE BELOW THE ROOTBALL SHALL BE COMPACTED TO PREVENT SETTLEMENT OF THE TREE.

TREE PLANTING WITH STRUCTURAL SOIL - TREE GRATES IN HARD SURFACE BOULEVARDS

Langley City
THE PLACE TO BE

DRAWN	Dec 2019
REVISED	
SCALE	N.T.S.
	SS-TP03

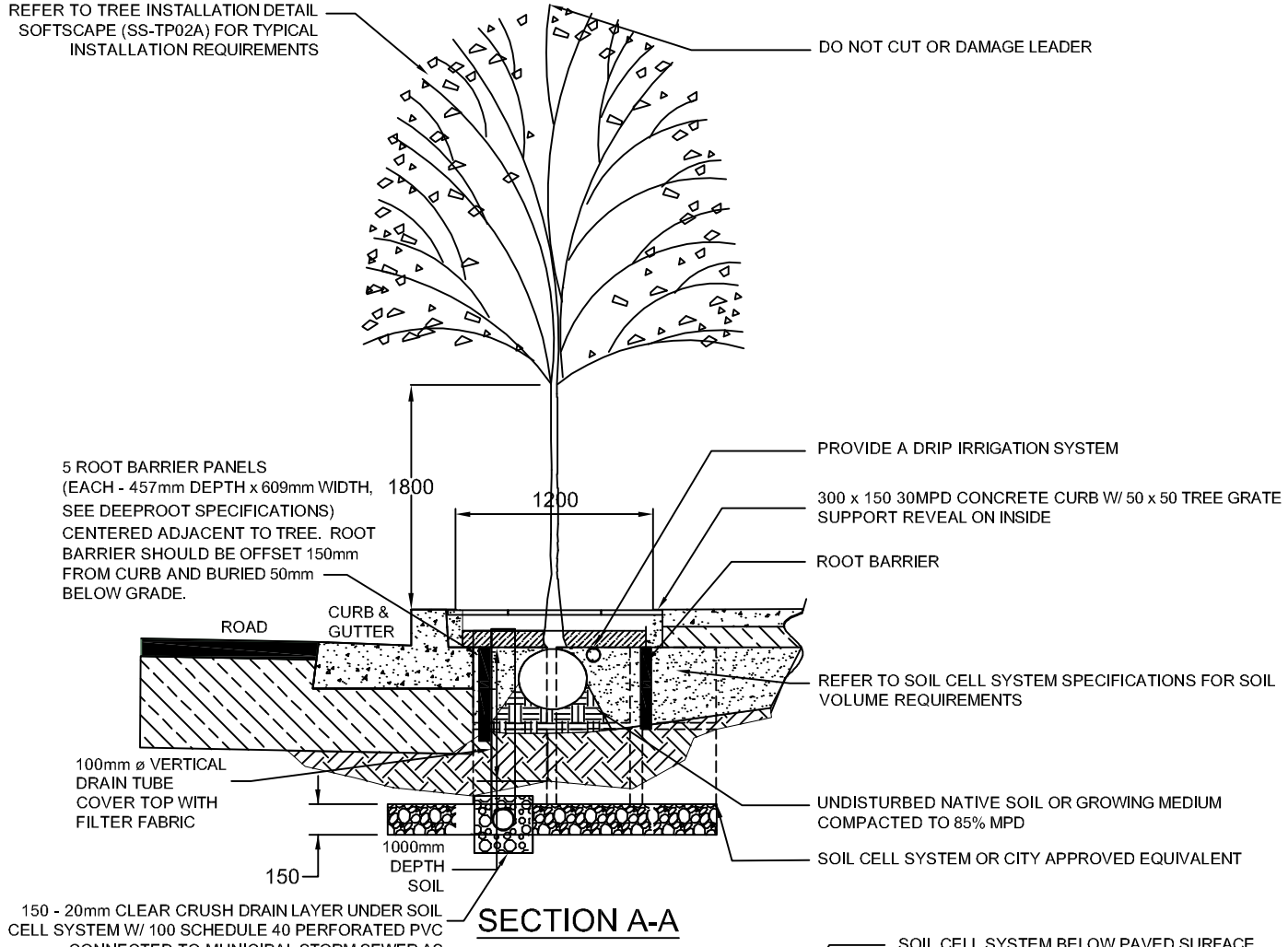

SECTION A-A

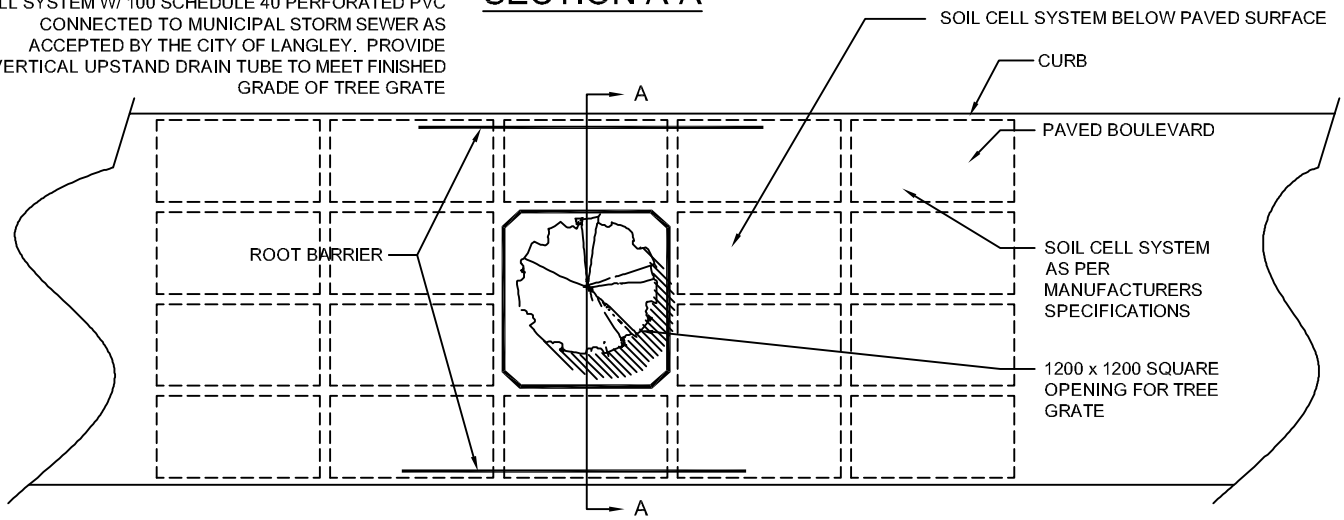

PLAN VIEW

NOTES:
1) CONTACT CITY ENGINEER TO REVIEW PLANTING HOLE EXCAVATION PRIOR TO INSTALLATION OF TOPSOIL AND TREE.
2) SACKING/BURLAP TO BE LOOSENED AND DROPPED TO THE BOTTOM OF THE PLANTING HOLE. ALL STRING, TWINE, ETC. TO BE REMOVED.
3) ALL WIRE BASKETS SHALL HAVE THE TOP 1/3 OF THE WIRE REMOVED PRIOR TO PLANTING.
4) ALL TREES SHALL BE SINGLE STEMMED.
5) EXCAVATION OF THE SUBGRADE BELOW THE ROOTBALLS OF TREES SHALL ONLY BE NECESSARY TO PERMIT THE BOTTOM OF THE ROOTBALL TO SIT ON UNDISTURBED MATERIAL OR COMPACTED FILL SO THAT THE TOP OF THE ROOTBALL REMAINS AT THE PROPER FINISHED GRADE. DISTURBED SUBGRADE BELOW THE ROOTBALL SHALL BE COMPACTED TO PREVENT SETTLEMENT OF THE TREE.

TREE PLANTING WITH SOIL CELL SYSTEM - TREE GRATES IN HARD SURFACE BOULEVARDS	Langley City THE PLACE TO BE	DRAWN Dec 2019
		REVISED
		SCALE N.T.S.
		SS-TP03A

TREE PROTECTION DETAIL

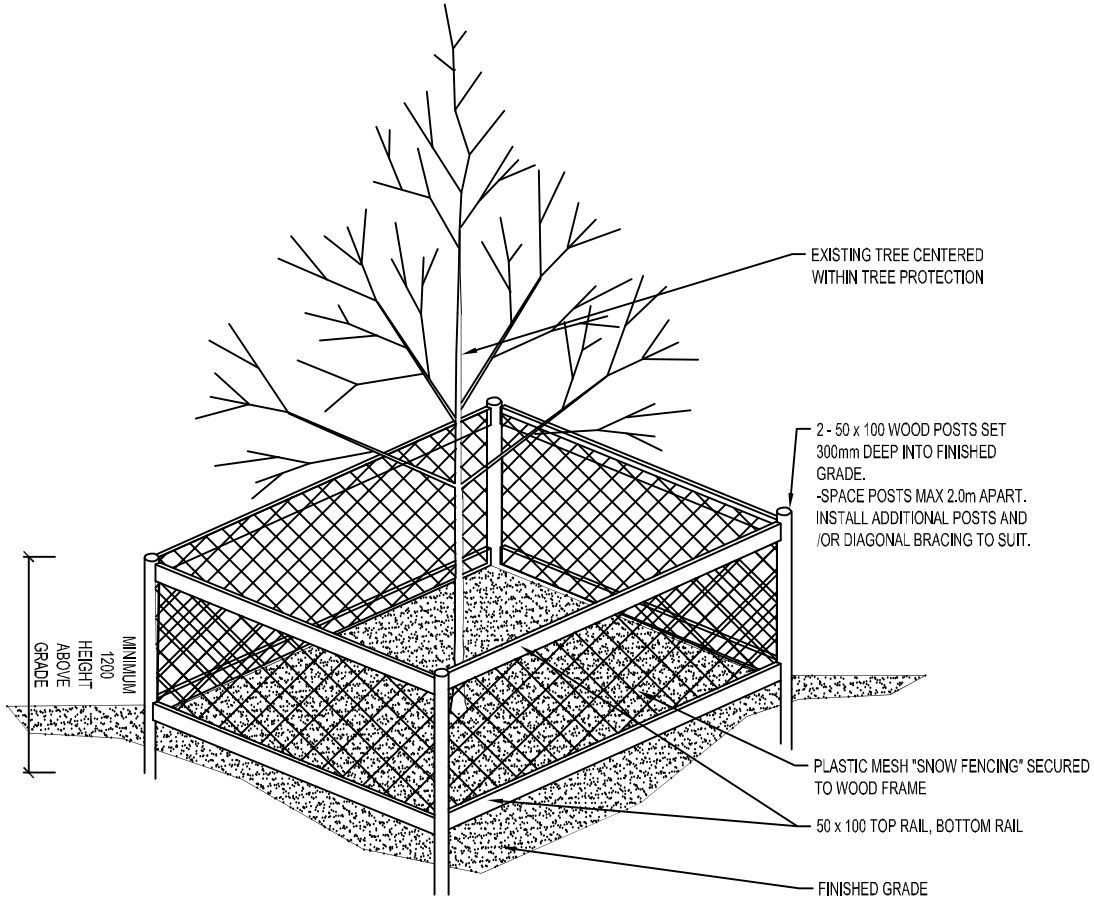

NOTES

1. INSTALL TREE PROTECTION BARRIER BEFORE SITE CLEARING AND ANY CONSTRUCTION BEGINS. MAINTAIN THROUGHOUT THE DURATION OF THE CLEARING AND CONSTRUCTION PHASE ALONG THE PERIMETER OF THE DESIGNATED RETENTION AREA.
2. STORAGE OF BUILDING MATERIALS & LITTER WITHIN OR AGAINST PROTECTION BARRIER IS PROHIBITED. CONTRACTOR RESPONSIBLE FOR MAINTENANCE WITHIN TREE PROTECTION BARRIER.
3. ANY CONSTRUCTION WITHIN THE TREE RETENTION AREA IS TO BE SUPERVISED BY THE PROJECT ARBORIST.
4. NO EXCAVATIONS, DRAIN OR SERVICE TRENCHES OR ANY OTHER DISRUPTION IS PERMITTED WITHIN THE RETENTION AREA. CONTACT THE CONSULTING ARBORIST IF THERE ARE ANY PROPOSED DISTURBANCES PRIOR TO PROCEEDING.
5. SEASONAL WATERING IS NECESSARY AND SHALL BE IMPLEMENTED BY THE SITE SUPERINTENDENT UNDER THE DIRECTION OF THE CONSULTING ARBORIST.
6. REPLANTING WITHIN THE TREE RETENTION AREA SHALL BE PERFORMED IN SUCH A MANNER AS TO MINIMIZE IMPACT TO ROOT ZONES OF RETAINED TREES.
7. TREE REMOVAL, PRUNING AND MODIFICATIONS SHOULD BE UNDER THE DIRECTION OF THE CONSULTING ARBORIST.
8. HUMUS LAYER AROUND EXISTING TREES TO REMAIN UNDISTURBED.
9. MAINTAIN EXISTING GRADES AT PROTECTION BARRIER FOR ALL PROTECTED RETAINED AND EXISTING TREES.
10. GRADES WITHIN THE TREE RETENTION AREA ARE TO REMAIN UNDISTURBED. MAINTAIN EXISTING GRADES AT PROTECTION BARRIER FOR ALL PROTECTED EXISTING RETAINED TREES.
11. REGRADING OUTSIDE OF PROTECTION BARRIER SHOULD NOT ADVERSELY COMPROMISE PROTECTED RETAINED AND EXISTING TREES.

"Tree Protection Zone" (TPZ) Based on Tree Size, measured as "Diameter at Breast Height" (DBH)

Trunk Diameter (DBH)	Minimum Protection Distances - Required TPZ for City-owned and Adjacent Trees
< 10 cm	1.2 m
10-29 cm	1.8 m
30-40 cm	2.4 m
41-50 cm	3.0 m
61-70 cm	4.2 m
71-80 cm	4.8 m
81-90 cm	5.4 m
91-100 cm	6.0 m
>100 cm	6 cm protection for each 1cm diameter

Langley City
THE PLACE TO BE

DRAWN December 2019
REVISED
SCALE N.T.S.

SS-TP04

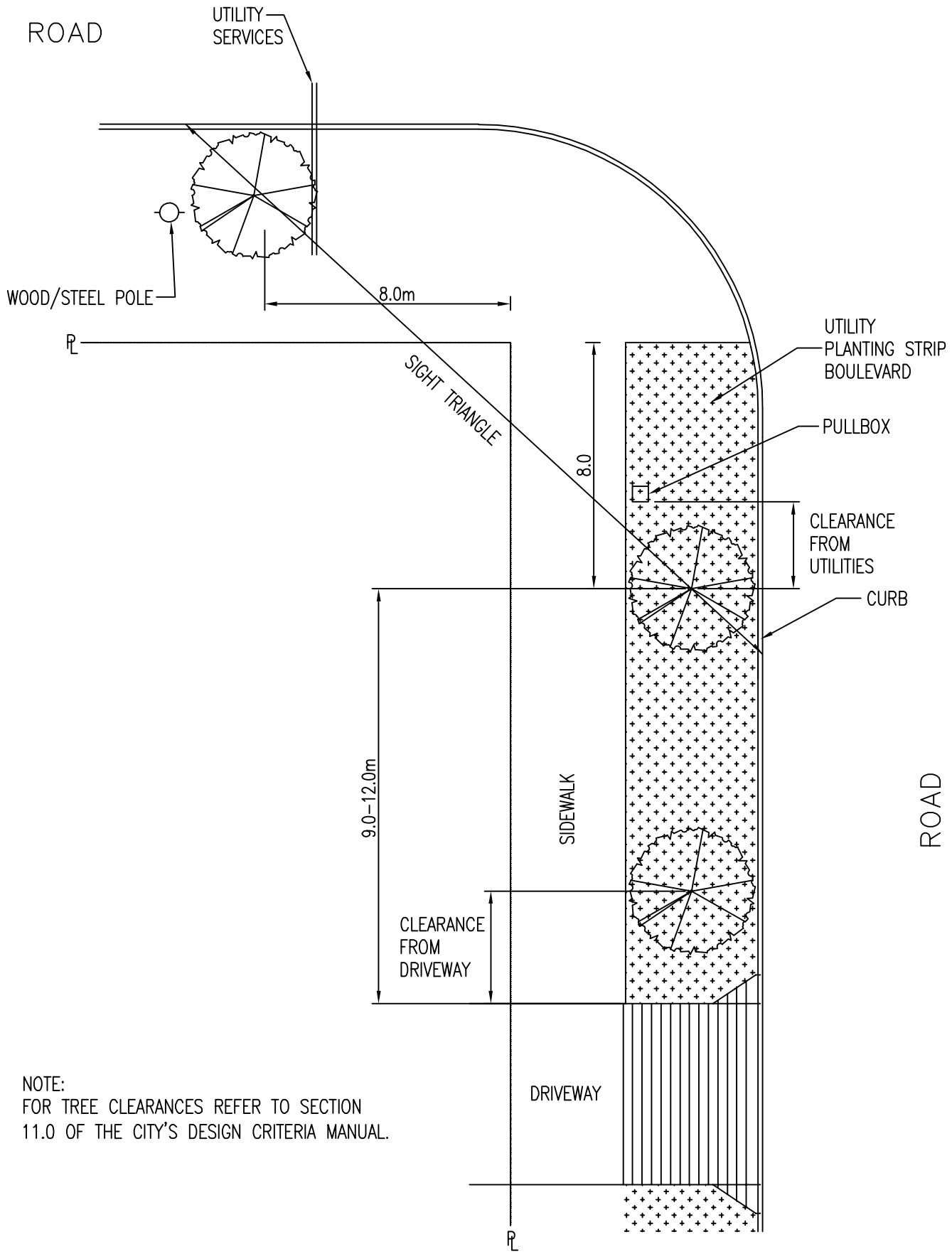

NOTE:
FOR TREE CLEARANCES REFER TO SECTION 11.0 OF THE CITY'S DESIGN CRITERIA MANUAL.

STREET TREE SETBACK / CLEARANCES

Langley City
THE PLACE TO BE

DRAWN	Dec 2019
REVISED	
SCALE	N.T.S.

SS-TP05

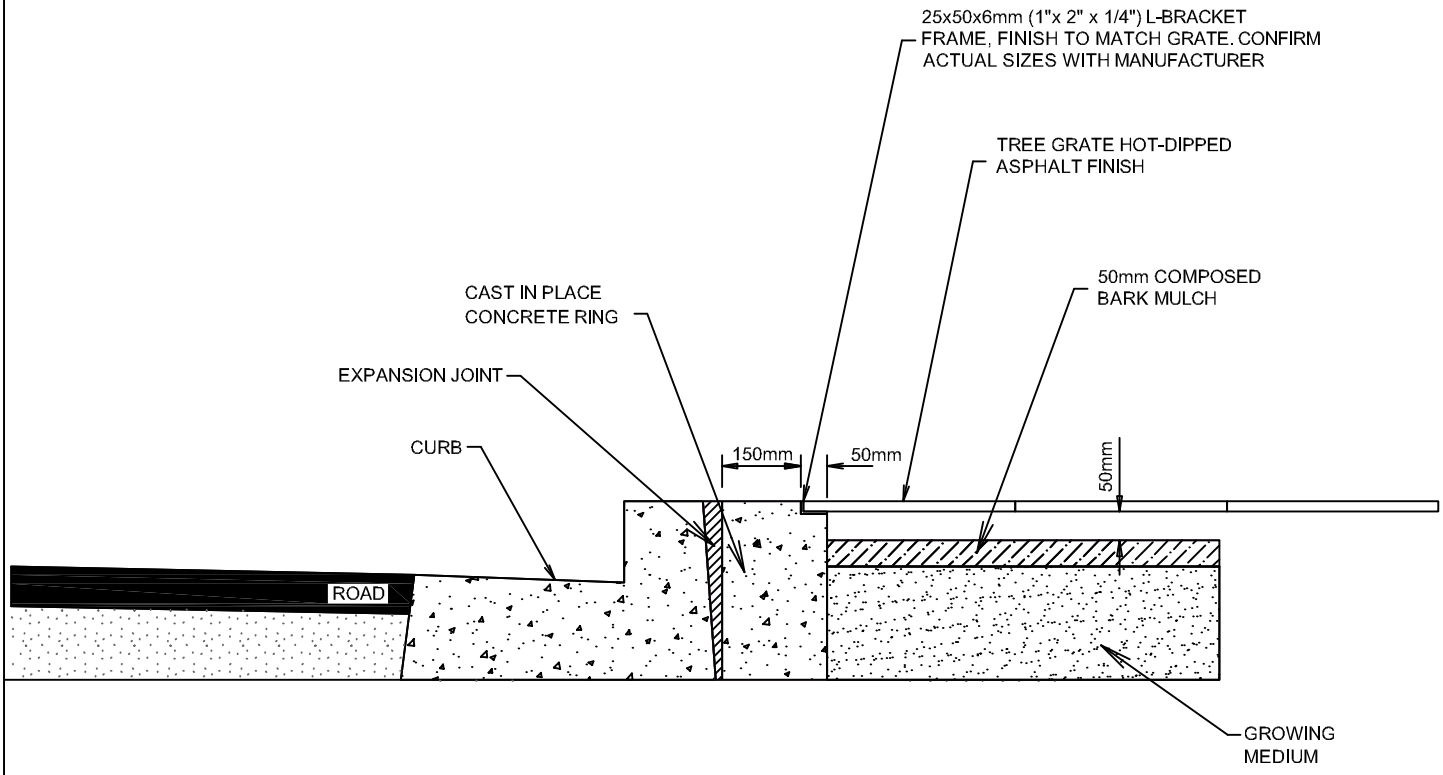

TREE GRATE FRAME SUPPORT	Langley City THE PLACE TO BE	DRAWN Dec 2019 REVISED SCALE N.T.S. SS-TP06

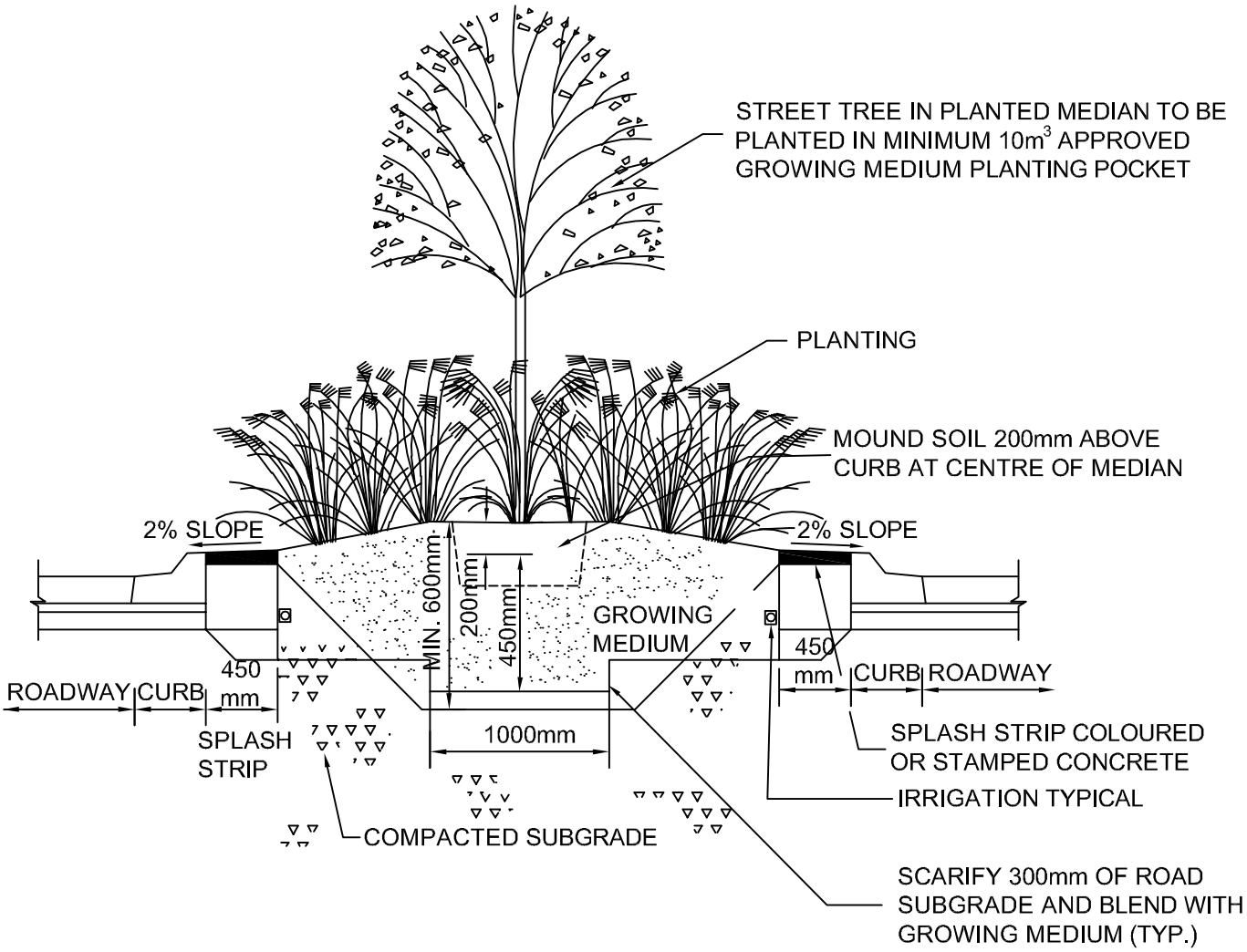

NOTES:

1) ADJACENT TOPSOIL TO BE COMPACTED TO PREVENT SETTLEMENT BELOW LEVEL OF SPLASH STRIP.
2) SPLASH STRIP PATTERN AND COLOUR AS PER PROJECT DRAWINGS.

TYPICAL PLANTED MEDIAN INSTALLATION	Langley City THE PLACE TO BE	DRAWN Dec 2019
		REVISED
		SCALE N.T.S.
		SS-TP07

SAMPLE NAME	DATE OF SAMPLE	C/N RATIO	pH	REQUIREMEMT TO pH 6.5 LIME	Salts (mmhos/cm) E.C.	Sand (%) SAND	Silt + Clay (%) FINES	Organic Matter (%) O.M.	Total Nitrogen (%) N	Phosphorus P	Calcium Ca	Magnesium Mg
AMENDMENTS REQUIRED												

COMMENTS:

PROPOSED SOIL CATEGORY	
LEVEL 1	
LEVEL 2&3	
LEVEL 4,5&6	

DESCRIPTIONS OF BCNLA SOIL LEVELS	
LEVEL NUMBERS	DESCRIPTIONS
LEVEL 1	All gravels <5%; Sand 50-70%; Silt: 10-25%; Clay: 0-20%; Organic Content: 10-20%; Acidity (pH): 4.5-6.5
LEVEL 2&3	All gravels <5%; Sand 40-80%; Silt: 10-25%; Clay: 0-25%; Organic Content: 10-20%; Acidity (pH): 4.5-6.5
LEVEL 4,5&6	All gravels <10%; Sand 30-70%; Silt: 15-50%; Clay: 15-30%; Organic Content: 5-20%; Acidity (pH): 4.5-7

SOIL TYPE ANALYSIS SHEET

Langley City THE PLACE TO BE

DRAWN	Dec 2019
REVISED	
SCALE	N.T.S.
	SS-TP08

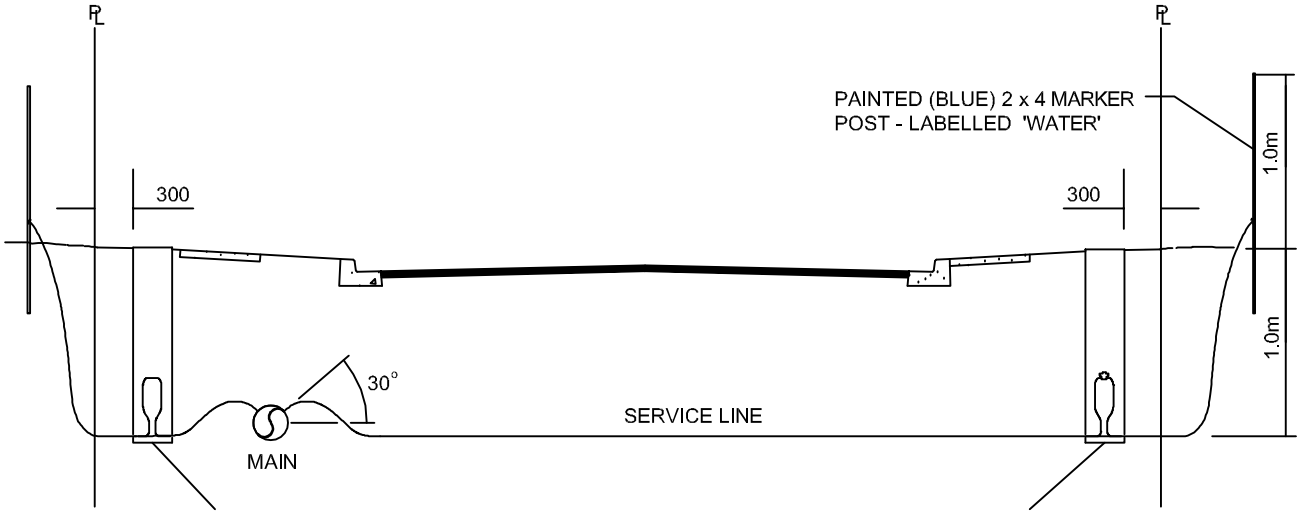

NOTE: IF CONFLICTS WITH OTHER INFRASTRUCTURE EXIST, MOVE WATER METER BOX TO PRIVATE SIDE OF PROPERTY LINE WITH RIGHT OF WAY REQUIREMENT.

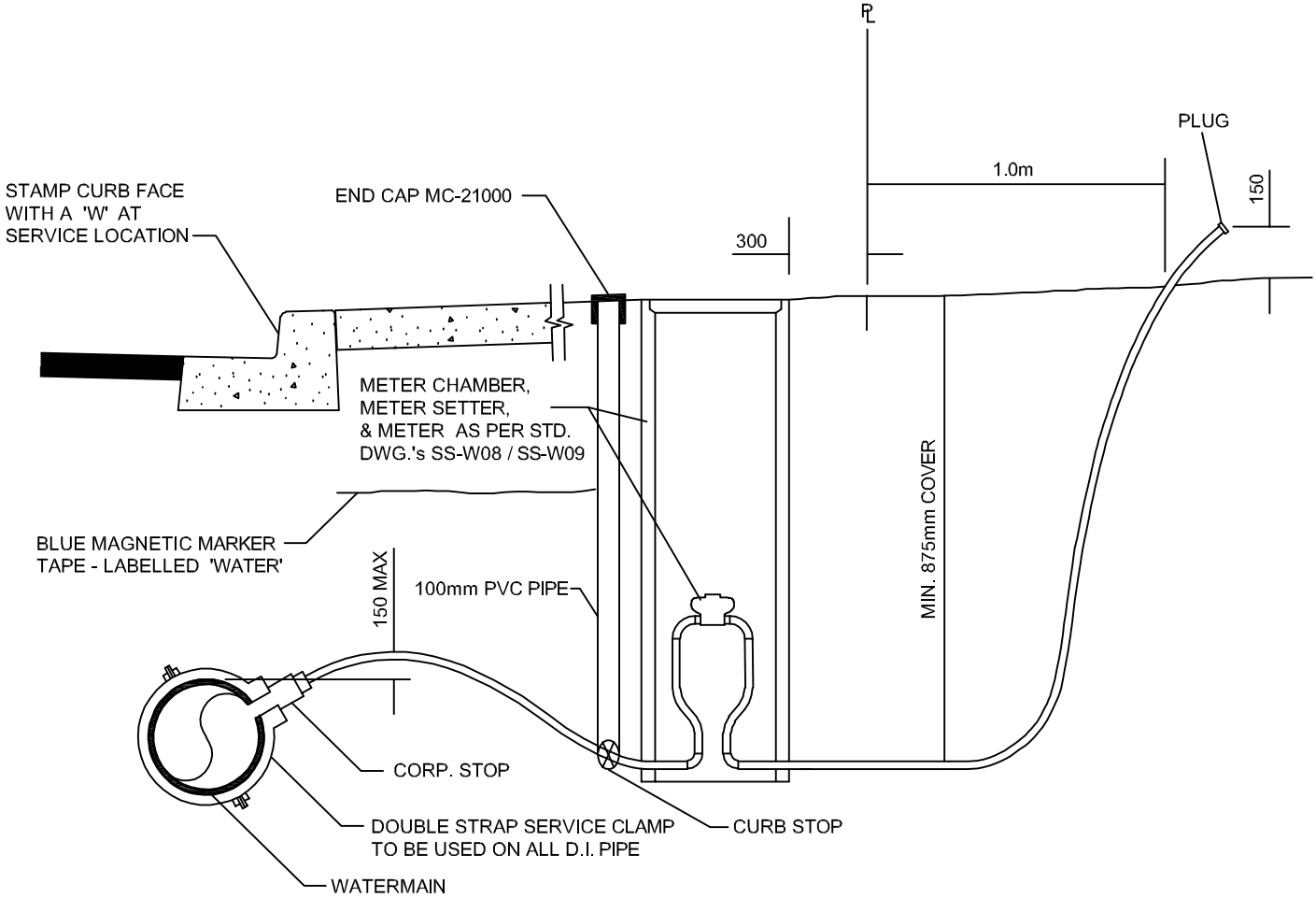

TYPICAL WATER SERVICE (19mm - 50mm) with METER BOX & SETTER (REPLACES MMCD-W2A/2B)	Langley City THE PLACE TO BE	DRAWN Dec 2019
		REVISED
		SCALE N.T.S.
		SS-W01

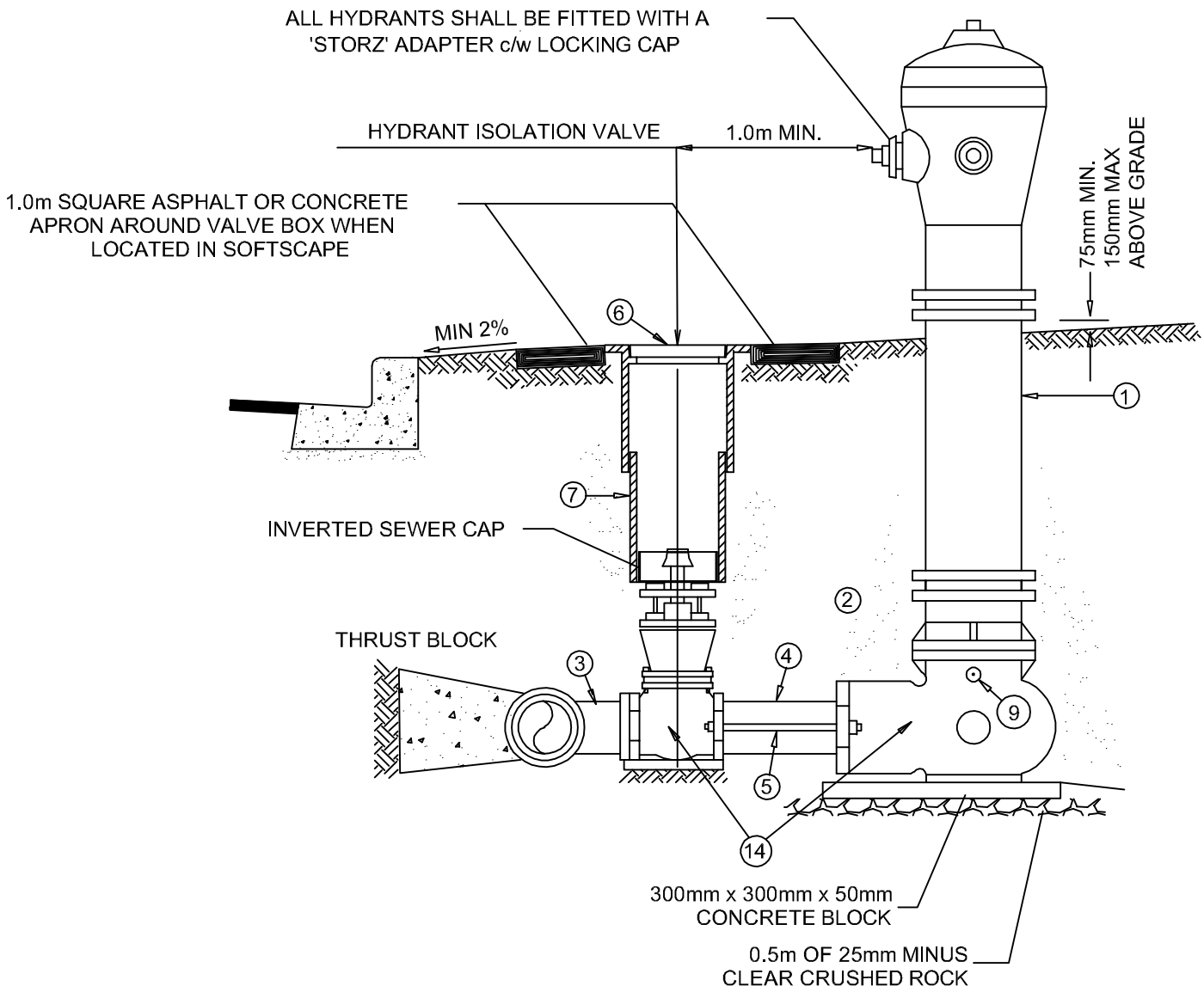

NOTES:

1. STANDARD 1.2m BURY HYDRANT
   TERMINAL CITY - COMPRESSION HYDRANT C71P 100mm
   'STORZ' ADAPTER AND LOCKING CAP
2. 19mm DRAIN ROCK TO COVER HYDRANT BOOT MINIMUM 0.5 CU.M.
3. 150mm TEE C/W FLANGED RESILIENT SEAT GATE VALVE
4. 150mm PVC LEAD MINIMUM 1.0 m
5. 19mm STAINLESS STEEL REDI-ROD AND NUT
6. ROBAR D-6 VALVE BOX
7. 150mm VALVE BOX RISER C/W DRILLED INVERTED SEWER CAP OVER 50mm SQUARE NUT
8. DRAIN HOLE TO BE KEPT CLEAR OF CONCRETE
9. ALL NEW HYDRANTS TO HAVE "OUT OF SERVICE" PLACARDS ON MAIN PORT, TO BE REMOVED BY CITY OF LANGLEY STAFF AFTER FIRST SERVICE.
10. ALL FITTINGS TO BE SEPERATED FROM CONCRETE WITH 6mil POLY.
11. ALL RAISE KITS TO BE INSTALLED BY CITY OF LANGLEY STAFF.
12. THRUST BLOCKS TO BE REPLACED BY JOINT RESTRAINTS WHERE REQUIRED BY THE CITY ENGINEER.
13. MAY USE MECHANICAL JOINT FITTINGS WITH JOINT RESTRAINT INSTEAD OF THRUST BLOCKS & TIE RODS.
14. 9LB ANODE FOR CATHODIC PROTECTION

TYPICAL HYDRANT ASSEMBLY (REPLACES MMCD-W4)	Langley City THE PLACE TO BE	DRAWN Dec 2019
		REVISED
		SCALE N.T.S.
		SS-W02

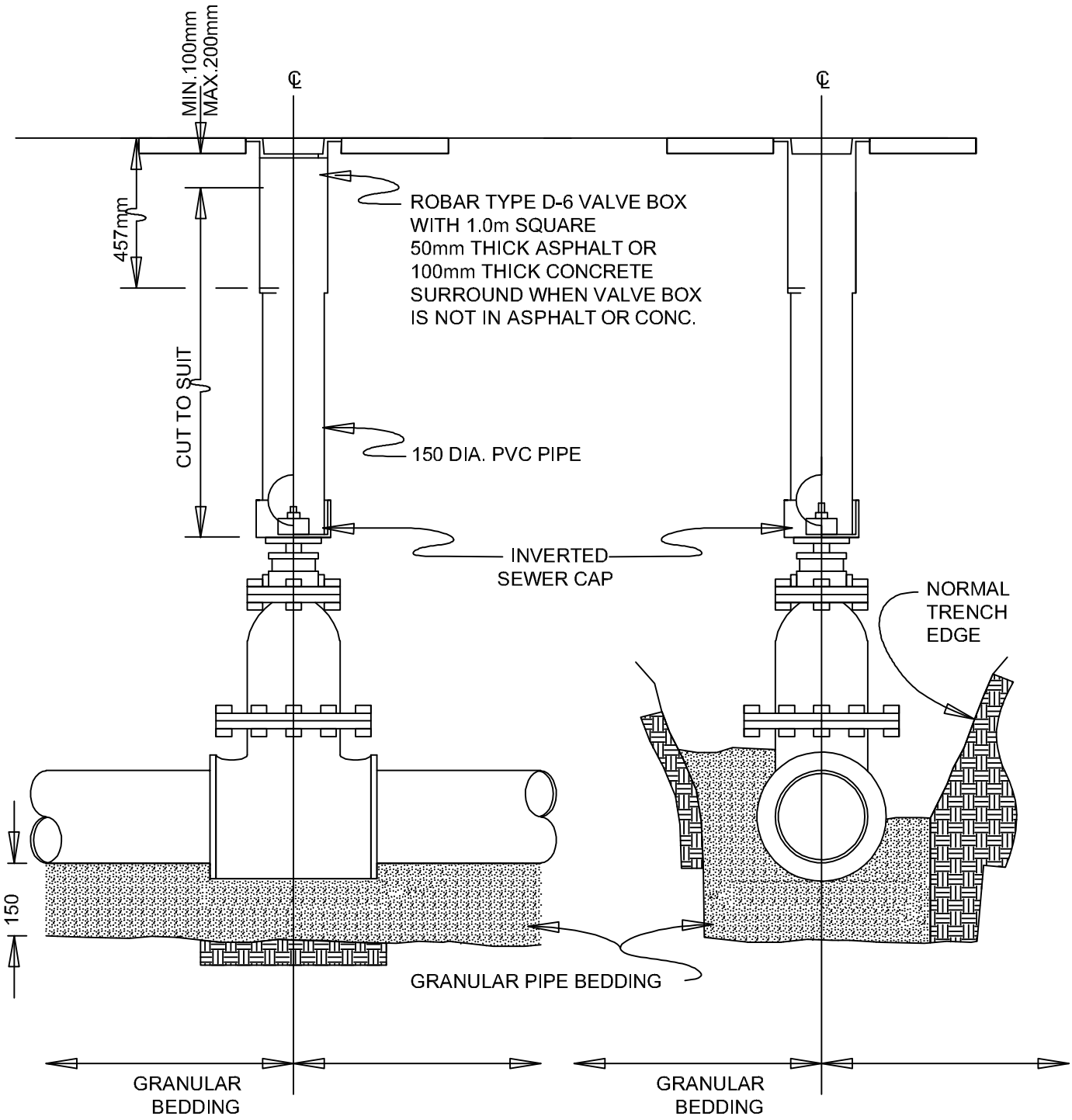

NOTE:

-ASPHALT OR CONCRETE AROUND COVERS APPLICABLE TO ALL VALVES ON BOULEVARDS AND PAVEMENTS.

-VALVE SHALL BE WRAPPED WITH DENSO TAPE COMPLETE WITH 9LB ANODE FOR CATHODIC PROTECTION.

INSTALLATION PROCEDURES:
1. REMOVE 2" SQUARE OPERATING NUT;
2. DRILL CAP SLIGHTLY LARGER THAN SHAFT & PLACE OVER SHAFT;
3. RE-INSTALL 2" SQUARE OPERATING NUT;
4. INSERT P.V.C. RISER PIPE INTO CAP.

TYPICAL GATE VALVE INSTALLATION FOR WATERMAIN (REPLACES MMCD-W3)	Langley City THE PLACE TO BE	DRAWN Dec 2019
		REVISED
		SCALE N.T.S.
		SS-W03

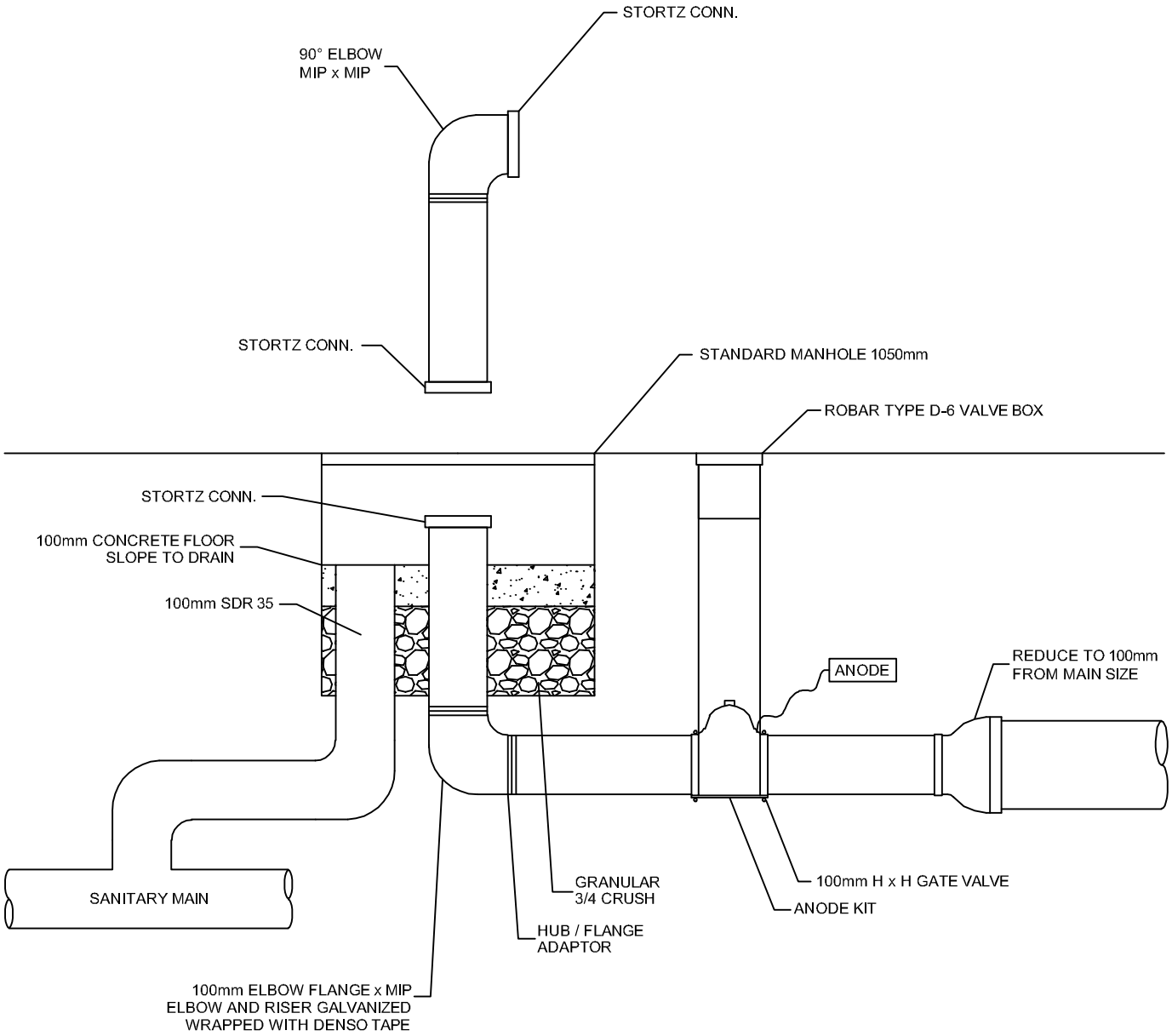

NOTES:
1) ALL FITTINGS WITH RESTRAINING CLAMPS
2) BLOW OFF ASSEMBLY FROM THE REDUCER IS FULLY RESTRAINED

100mm WATER BLOW-OFF ON ALL WATERMAIN END POINTS (REPLACES MMCD-W8)	Langley City THE PLACE TO BE	DRAWN Dec 2019
		REVISED
		SCALE N.T.S.
		SS-W04

TYPICAL SIZING OF CONCRETE THRUST BLOCKS (REPLACES MMCD-W1)

$Ab = \left(\frac{T}{SB}\right) 101.97^*$

*CONV. FACTOR kN TO kg

P= PRESSURE= 2068kPa

Ab= SURFACE AREA OF BLOCK AGAINST NATIVE GROUND

T= THRUST (kN)

A= PIPE CROSS SECTIONAL AREA (m^2)

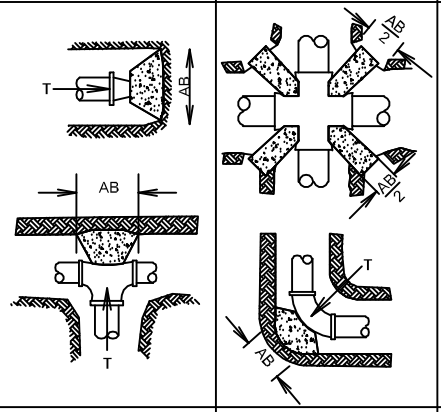

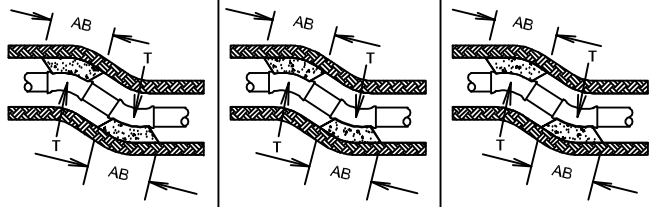

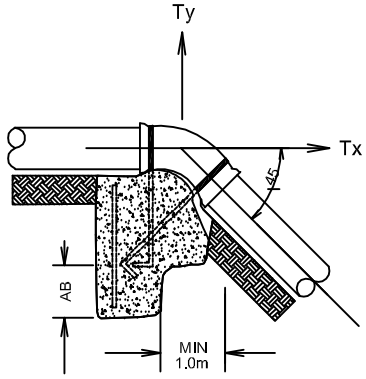

		CAPS PLUGS & TEES		90° ELBOWS		45° ELBOWS		22 1/2° ELBOWS		11 1/4° ELBOWS		VERTICAL BENDS & ANCHOR BLOCK
FORMULAS		T=PA		T=2PA(SIN90°/2)		T=2PA(SIN45°/2)		T=2PA(SIN22.5°/2)		T=2PA(SIN11.25°/2)		Tx=PA(1-COS θ) CONC. VOL.=PA(SIN θ)101.97* / 2400kg/m³
MAX. ALLOWABLE SOIL BEARING (SB) LOADS kg/m²	FITTING SIZE mm	THRUST (T) kN	MINIMUM BLOCK BASE AREA cm²	THRUST (T) kN	MINIMUM BLOCK BASE AREA cm²	THRUST (T) kN	MINIMUM BLOCK BASE AREA cm²	THRUST (T) kN	MINIMUM BLOCK BASE AREA cm²	THRUST (T) kN	MINIMUM BLOCK BASE AREA cm²	
97,650 HARDPAN OR SHALE	100	16.3	170	23.1	250	12.5	140	6.4	70	3.2	40	
	150	36.6	390	51.8	550	28.0	300	14.3	150	7.2	80	
	200	65.0	680	91.9	960	49.7	520	25.3	270	12.7	140	
	300	146.2	1530	206.8	2160	111.9	1170	57.1	600	28.7	300	
58,600 HARD CLAY	100	16.3	290	23.1	410	12.5	220	6.4	120	3.2	60	
	150	36.6	640	51.8	910	28.0	490	14.3	250	7.2	130	
	200	65.0	1140	91.9	1600	49.7	870	25.3	440	12.7	230	
	300	146.2	2550	206.8	3600	111.9	1950	57.1	1000	28.7	500	
22,300 SAND COURSE, LOOSE OR FINE COMPACT	100	16.3	750	23.1	1060	12.5	580	6.4	300	3.2	150	
	150	36.6	1680	51.8	2370	28.0	1280	14.3	660	7.2	330	
	200	65.0	2970	91.9	4200	49.7	2280	25.3	1160	12.7	580	
	300	146.2	6690	206.8	9460	111.9	5120	57.1	2620	28.7	1320	
9,800 SOFT CLAY	100	16.3	1700	23.1	2410	12.5	1300	6.4	670	3.2	340	
	150	36.6	3810	51.8	5390	28.0	2920	14.3	1490	7.2	750	
	200	65.0	6760	91.9	9560	49.7	5180	25.3	2640	12.7	1330	
	300	146.2	15220	206.8	21520	111.9	11650	57.1	5950	28.7	2990	

NOTES

1. CONCRETE THRUST BLOCKS SHALL EXTEND INTO AND BEAR DIRECTLY ONTO UNDISTURBED SOIL. THRUST IN SOFT UNSTABLE SOILS WILL REQUIRE REMOVAL OF SOIL AND REPLACEMENT WITH COMPACTABLE FILL OF SUFFICIENT STABILITY TO RESIST THRUST, OR SPECIAL ANCHOR BLOCK AS DIRECTED BY A PROFESSIONAL ENGINEER.

2. CONCRETE THRUST BLOCKS WILL BE REQUIRED FOR ALL ELBOWS, TEES, PLUGS CAPS, PIPE DEFLECTIONS AND OTHER FITTINGS ON LIVE MAINS WHERE ANCHOR RODS ARE NOT PRACTICAL.

3. CONCRETE THRUST BLOCKS SHALL BE OF AT LEAST 15MPa, 28 DAY CONCRETE OR HIGH EARLY STRENGTH CONCRETE IF REQUIRED.

4. CONCRETE THRUST BLOCKS SHALL BE KEPT CLEAR OF BELLS WHERE POSSIBLE.

5. CONCRETE THRUST BLOCKS FOR VERTICAL BENDS AND ANCHOR BLOCKS SHALL BE DESIGNED AND SEALED BY A PROFESSIONAL ENGINEER.

6. FOR SPECIFICATIONS OF LARGER Ø PIPES, OR OPERATING PRESSURES GREATER THAN 1380kPa, SEE ENGINEER.

7. BLOCK HEIGHT SHOULD BE EQUAL TO OR LESS THAN ONE-HALF THE TOTAL DEPTH TO THE BOTTOM OF THE BLOCK, BUT NOT LESS THAN THE PIPE DIAMETER.

8. BLOCK HEIGHT SHOULD BE CHOSEN SUCH THAT THE CALCULATED BLOCK WIDTH VARIES BETWEEN ONE AND TWO TIMES THE HEIGHT.

(SUPPLEMENTS MMCD-W1)

Langley City
THE PLACE TO BE

DRAWN Dec 2019
REVISED
SCALE N.T.S.

SS-W05

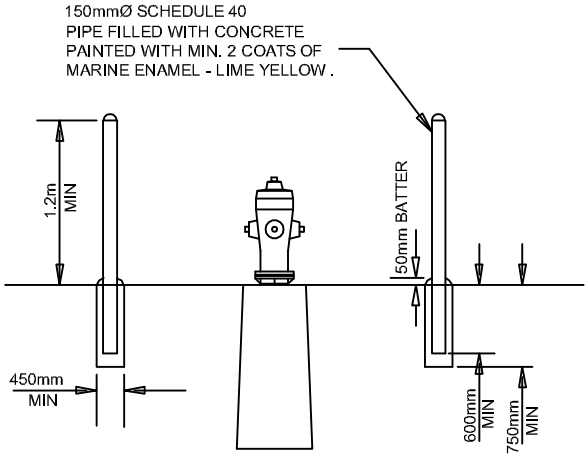

NOTE:

WHERE CURBING IS WITHIN
3m OF HYDRANT, BOLLARDS ONLY
REQUIRED ON OPEN SIDE.

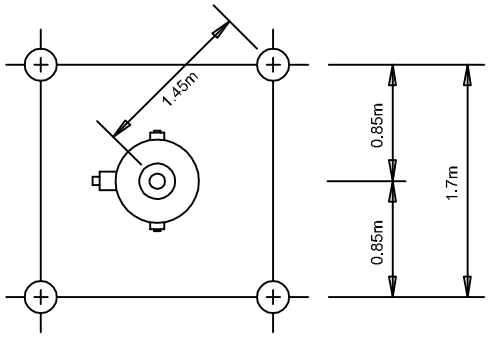

HYDRANT PROTECTION LOCATION

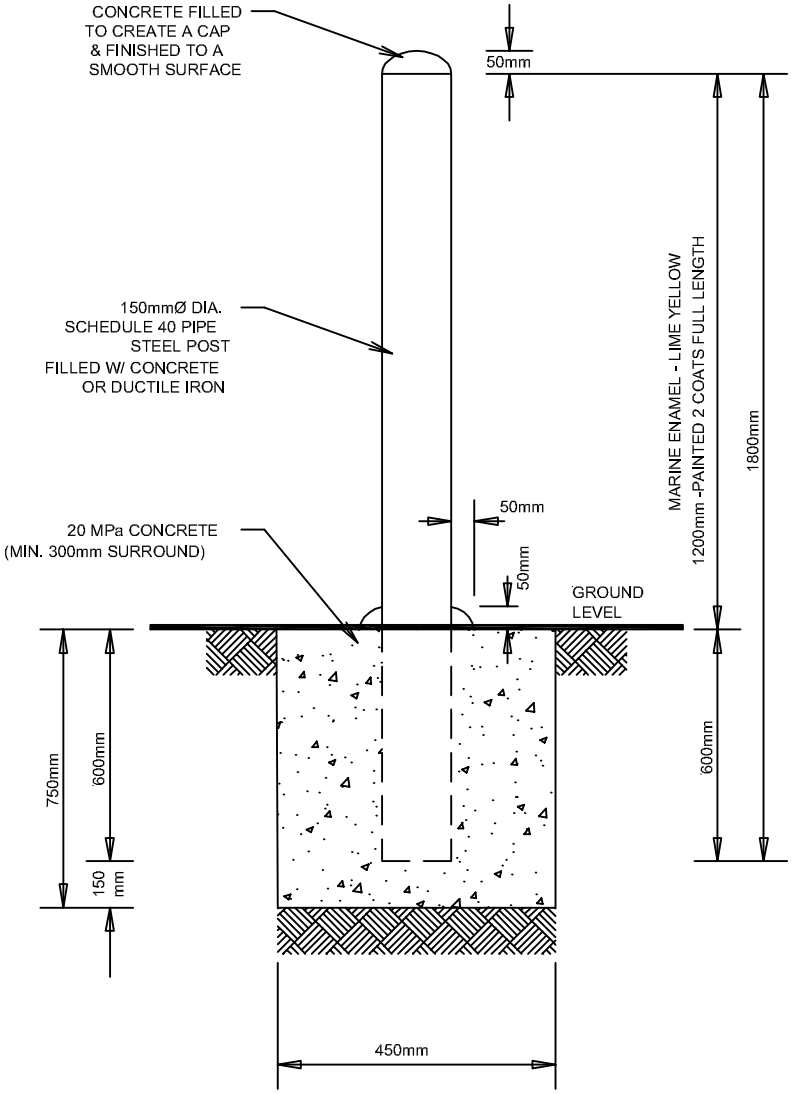

BOLLARD DETAIL

TYPICAL OPEN AREA HYDRANT PROTECTION AND STEEL BOLLARD FILLED WITH CONCRETE

Langley City
THE PLACE TO BE

DRAWN	Dec 2019
REVISED	
SCALE	N.T.S.
	SS-W06

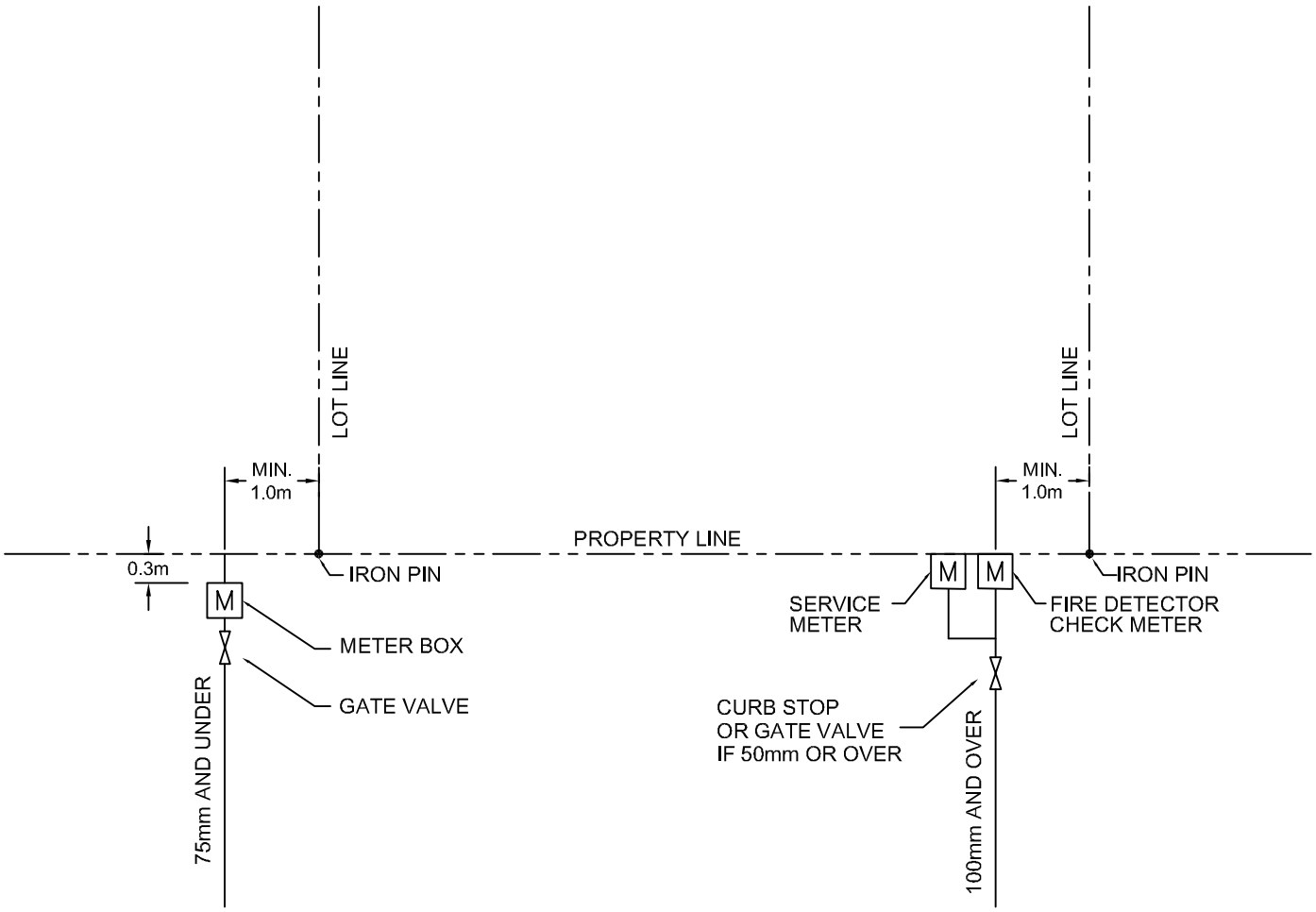

NOTES:

(1) CONNECTIONS GREATER THAN 75mm SHALL BE THRUST BLOCKED.
(2) ALL FITTINGS OVER 50 DIA SHALL HAVE FLANGE OR HUB JOINTS.
(3) FIRE LINES ARE FOR FIRE FIGHTING ONLY; NO OTHER USES ARE PERMITTED.
(4) CHAMBERS FOR METERS GREATER THAN 50 SHALL BE SUITABLY SIZED TO ALLOW ACCESS.
(5) MINIMUM SEPARATION OF 3.0m BETWEEN WATER METER AND STORM/SANITARY SERVICES.

TYPICAL SERVICE INSTALLATION	Langley City THE PLACE TO BE	DRAWN Dec 2019
		REVISED
		SCALE N.T.S.
		SS-W07

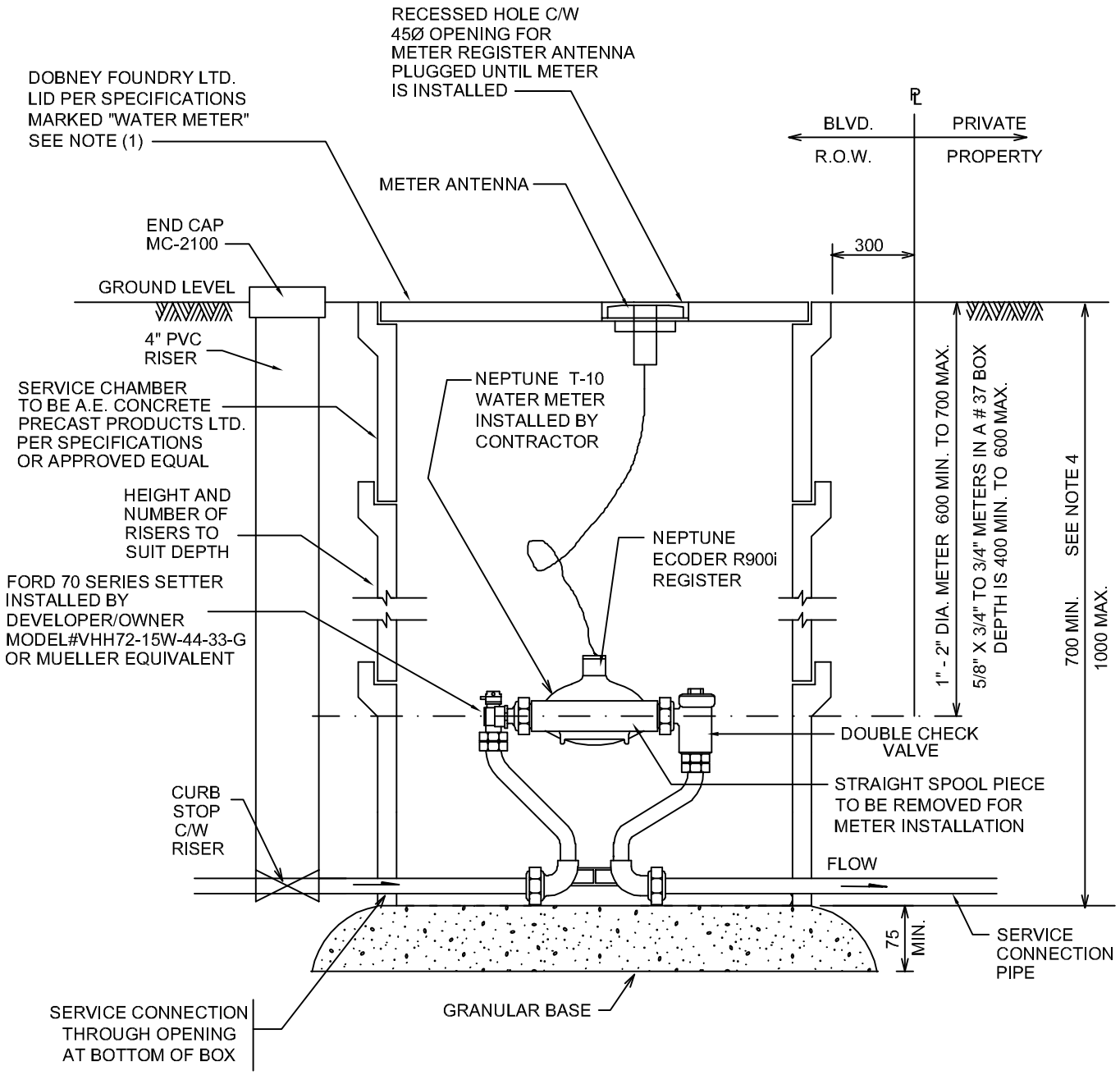

NOTES:
(1) ALL CHAMBERS SHALL BE CONCRETE BY AE CONCRETE PRECAST PRODUCTS OR APPROVED EQUAL C/W DUCTILE IRON DOBNEY FOUNDRY LID TO H-20 TRAFFIC LOADING AND RECESSED OFFSET HOLE TO BE INSTALLED & SUPPLIED BY THE DEVELOPER / OWNER.
(2) FORD 70 SERIES OR MULLER EQUIVALENT SETTER, COMPLETE WITH DUAL CHECK VALVE TO BE INSTALLED & SUPPLIED BY DEVELOPER / OWNER.
(3) MATERIALS AND CONSTRUCTION SHALL CONFORM TO CITY OF LANGLEY STANDARDS.
(4) LID TO BE MARKED "WATER METER" ; H-20 LOADING MANDATORY.
(5) DEVELOPER TO INSTALL SERVICE CHAMBER & SETTER C/W DOUBLE CHECK VALVES.

METER INSTALLATION 50mm Ø AND UNDER (REPLACES MMCD-W2C/2D)

Langley City
THE PLACE TO BE

DRAWN	Dec 2019
REVISED	
SCALE	N.T.S.
	SS-W08

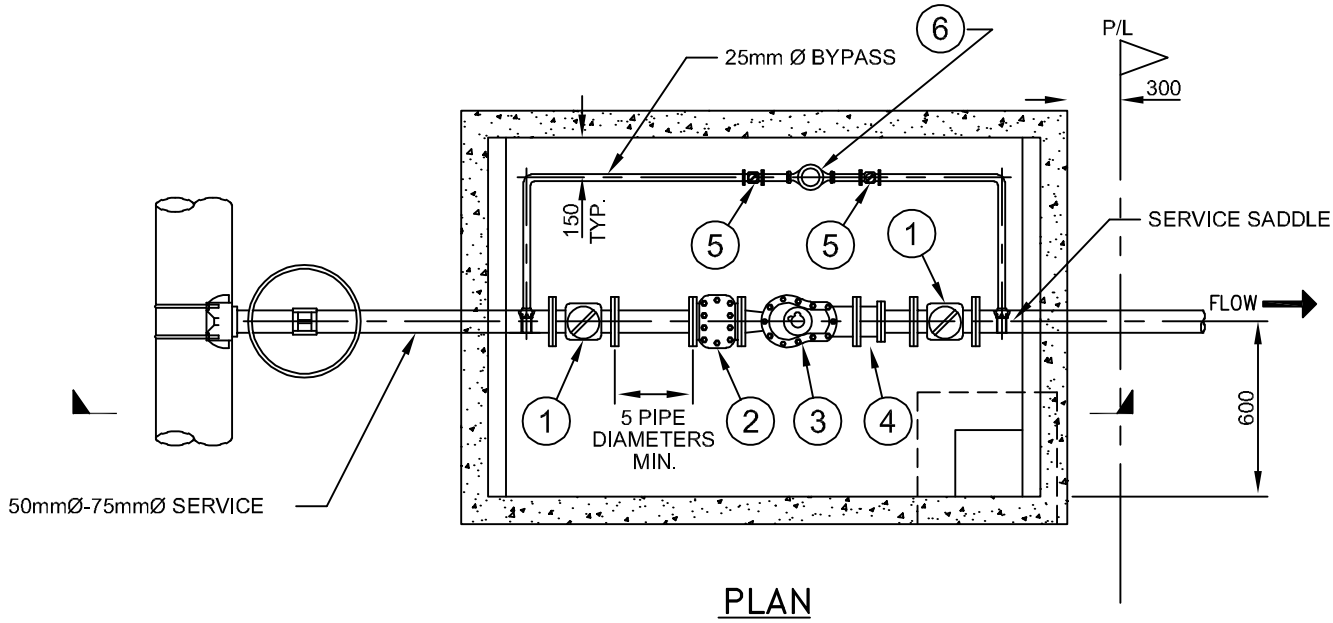

PLAN

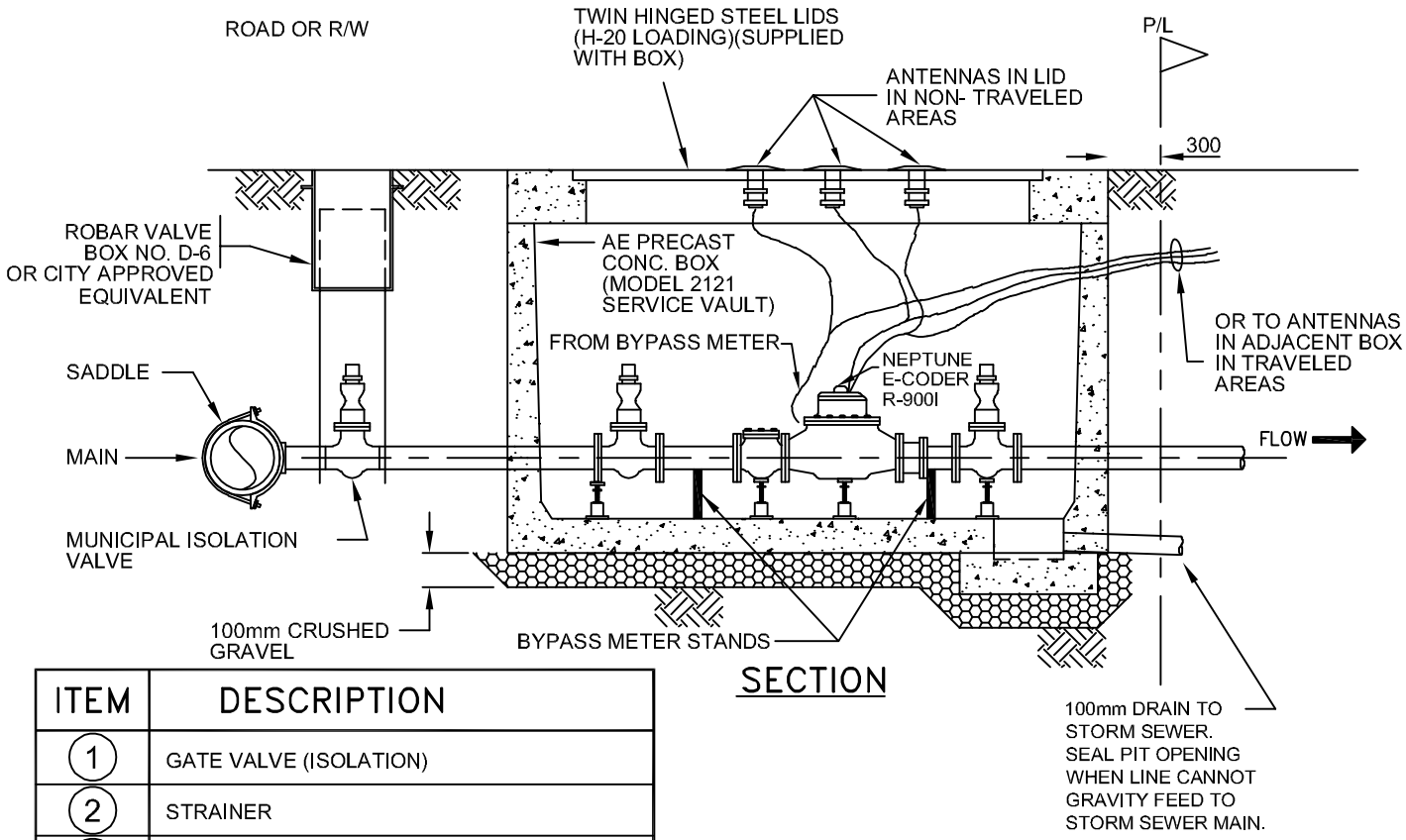

SECTION

ITEM	DESCRIPTION
1	GATE VALVE (ISOLATION)
2	STRAINER
3	FLOW METER
4	FLANGE ADAPTOR
5	BYPASS BALL VALVE WITH LOCK WING AND HANDLE
6	BYPASS LINE WATER METER (LINE SIZED)

NOTES

1. PIPE CONNECTIONS MAY BE THREADED OR FLANGED.
2. ALL BYPASS PIPE TO BE STAINLESS STEEL OR BRASS/COPPER.
3. TEST POINT REQUIRED FOR 75mm AND LARGER METERS.

METER INSTALLATION
50-75mm Ø - COMPOUND

Langley City
THE PLACE TO BE

DRAWN	May 2021
REVISED	
SCALE	N.T.S.

SS-W09

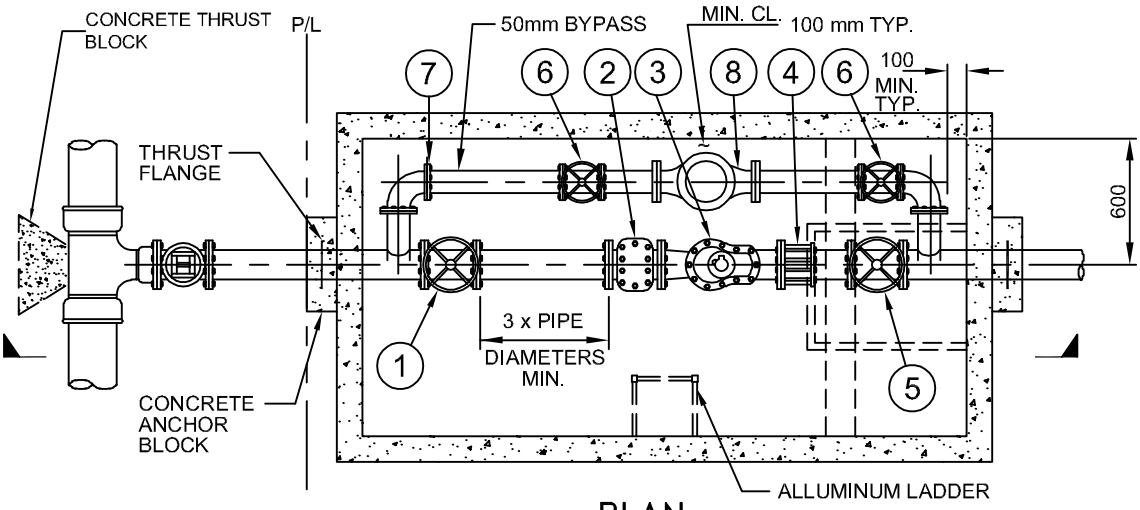

PLAN

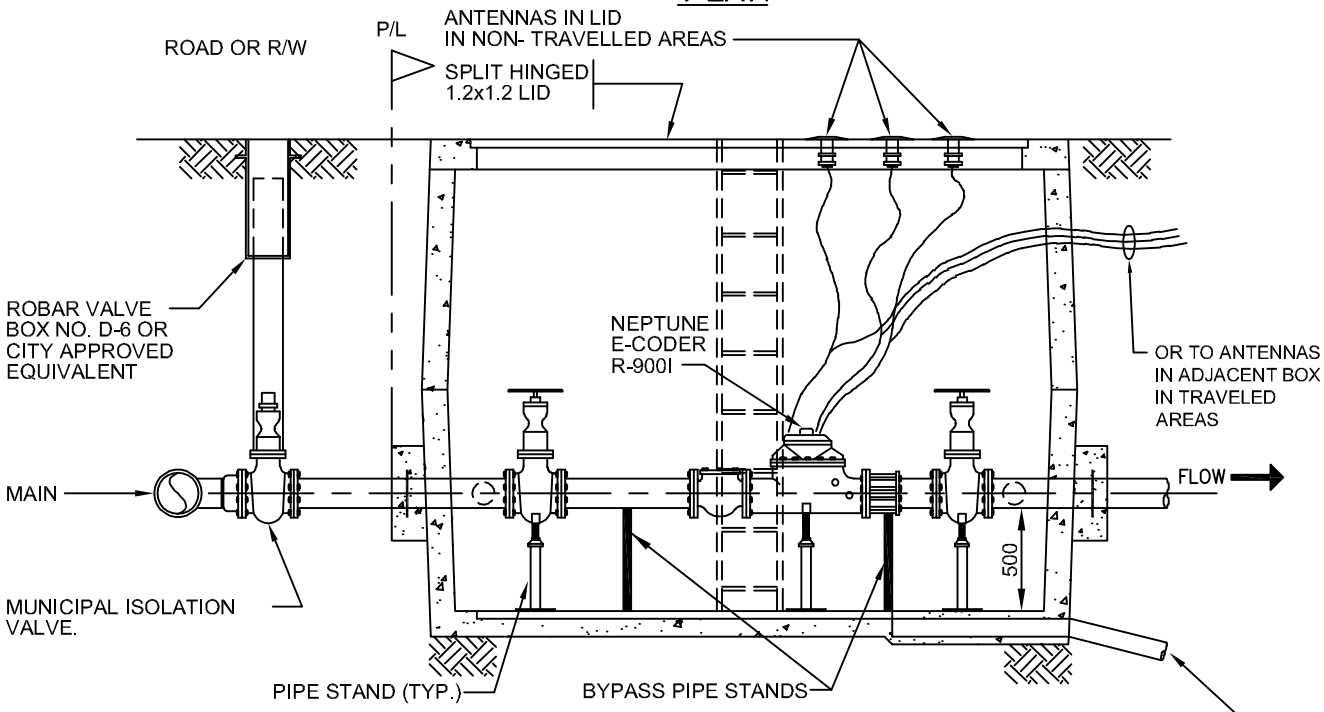

SECTION

NOTES

1. BYPASS PIPING TO BE STAINLESS STEEL OR BRASS/COPPER.

ITEM	DESCRIPTION	ITEM	DESCRIPTION
1	UPSTREAM ISOLATION GATE VALVE	5	DOWNSTREAM ISOLATION GATE VALVE
2	STRAINER	6	BYPASS ISOLATION VALVE
3	COMPOUND WATER METER	7	VICTAULIC COUPLING OR APPROVED
4	FLANGE ADAPTOR	8	BYPASS WATER METER (LINE SIZE)

METER INSTALLATION 100-150mm Ø - COMPOUND

Langley City THE PLACE TO BE

DRAWN	May 2021
REVISED	
SCALE	N.T.S.

SS-W10

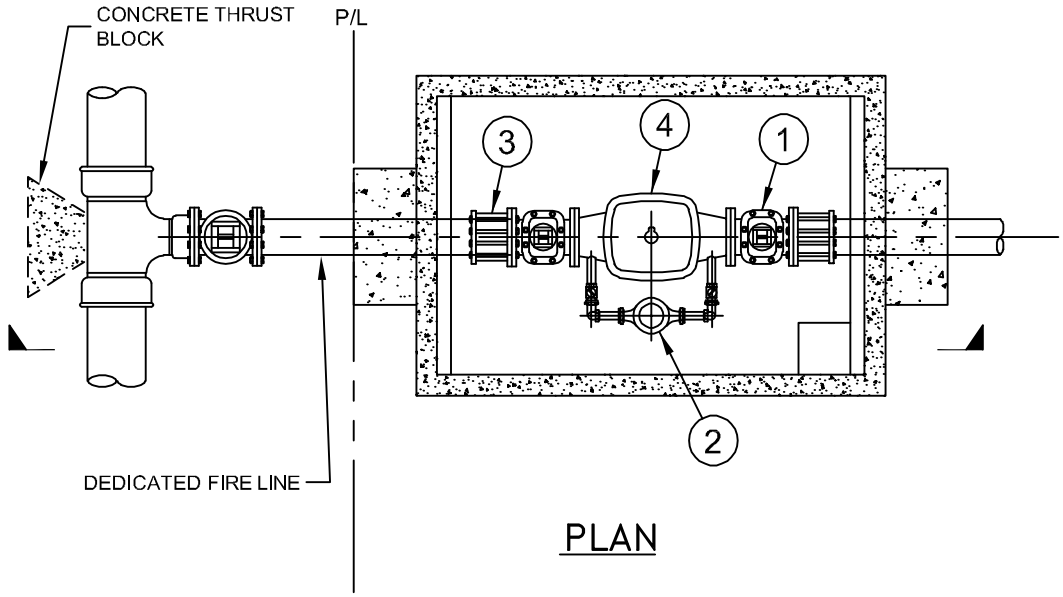

PLAN

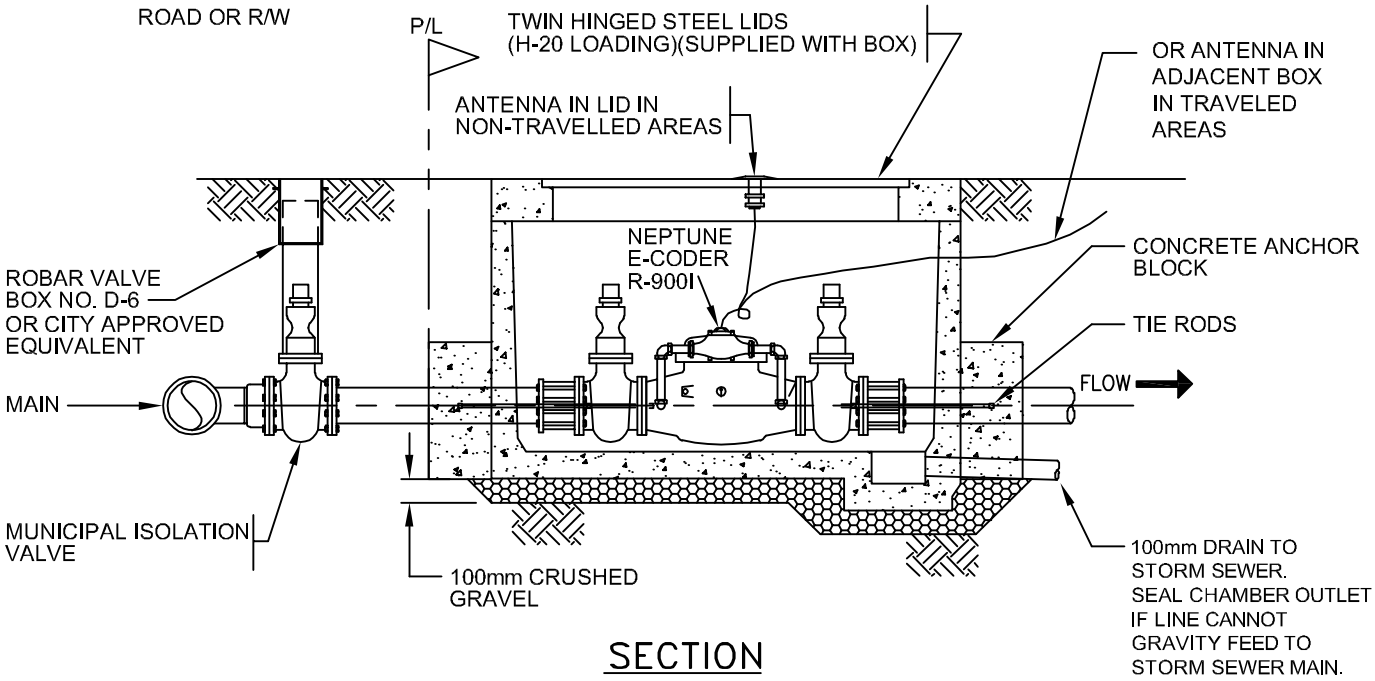

SECTION

ITEM	DESCRIPTION
1	GATE VALVE (ISOLATION)
2	NEPTUNE DETECTOR METER
3	FLANGE ADAPTOR
4	DOUBLE DETECTOR CHECK VALVE

VAULTS
100 - 150mm AE Concrete 2121 TYPE (SHOWN)
250mm AE CONCRETE 3151 TYPE

NOTES

1. ALL FITTINGS TO BE FLANGED.
2. DETECTOR CHECK PIPING STAINLESS STEEL OR BRASS/COPPER.

100-250mm Ø DEDICATED FIRE LINE ONLY WITH DETECTOR METER

Langley City
THE PLACE TO BE

DRAWN	May 2021
REVISED	
SCALE	N.T.S.

SS-W11

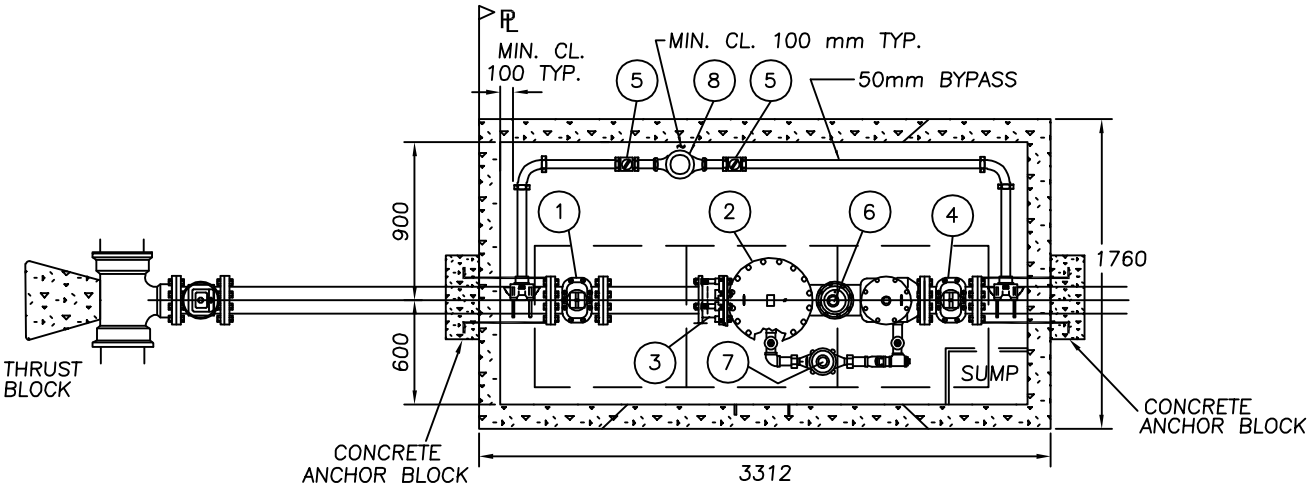

PLAN

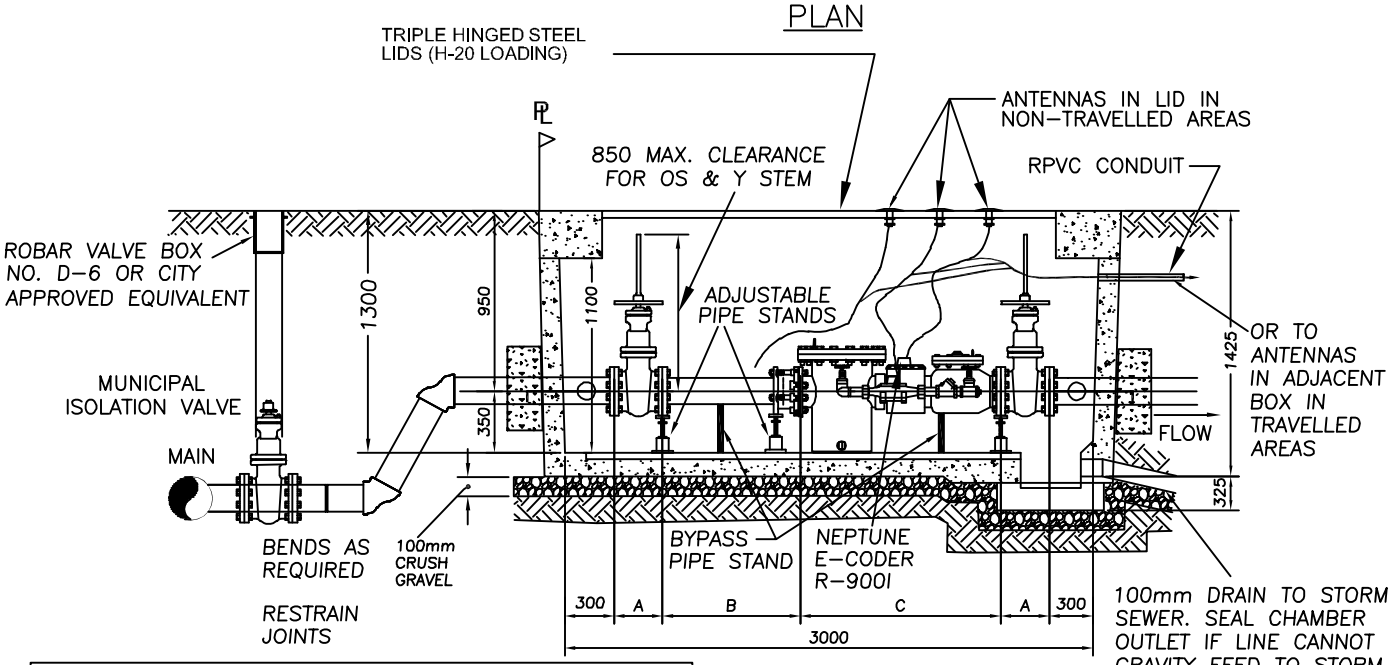

SECTION

No.	DESCRIPTION
1	UPSTREAM RESILENT SEAT GATE VALVE (OS & Y)
2	METER ASSEMBLY c/w BASKET STRAINER
3	MECHANICAL FLANGE ADAPTOR
4	DOWNSTREAM RESILENT SEAT GATE VALVE (OS & Y)
5	BYPASS BALL VALVE WITH LOCKWING AND HANDLE
6	FIRE LINE METER
7	DOMESTIC LINE METER
8	BYPASS LINE METER (SAME SIZE AS BYPASS LINE)

DIMENSIONS	
METER	150ø
A	267
B	723
C*	1143

* VERIFY THIS DIMENSION WITH MANUFACTURER

NOTES

1. DOMESTIC LINE TO BE STAINLESS STEEL OR BRASS/COPPER
2. 1500mm X 3000mm CHAMBER (AE CONCRETE, MODEL 3151)

METER INSTALLATION 150mm Ø FIRE/DOMESTIC METER

Langley City
THE PLACE TO BE

DRAWN	May 2021
REVISED	
SCALE	N.T.S.

SS-W12

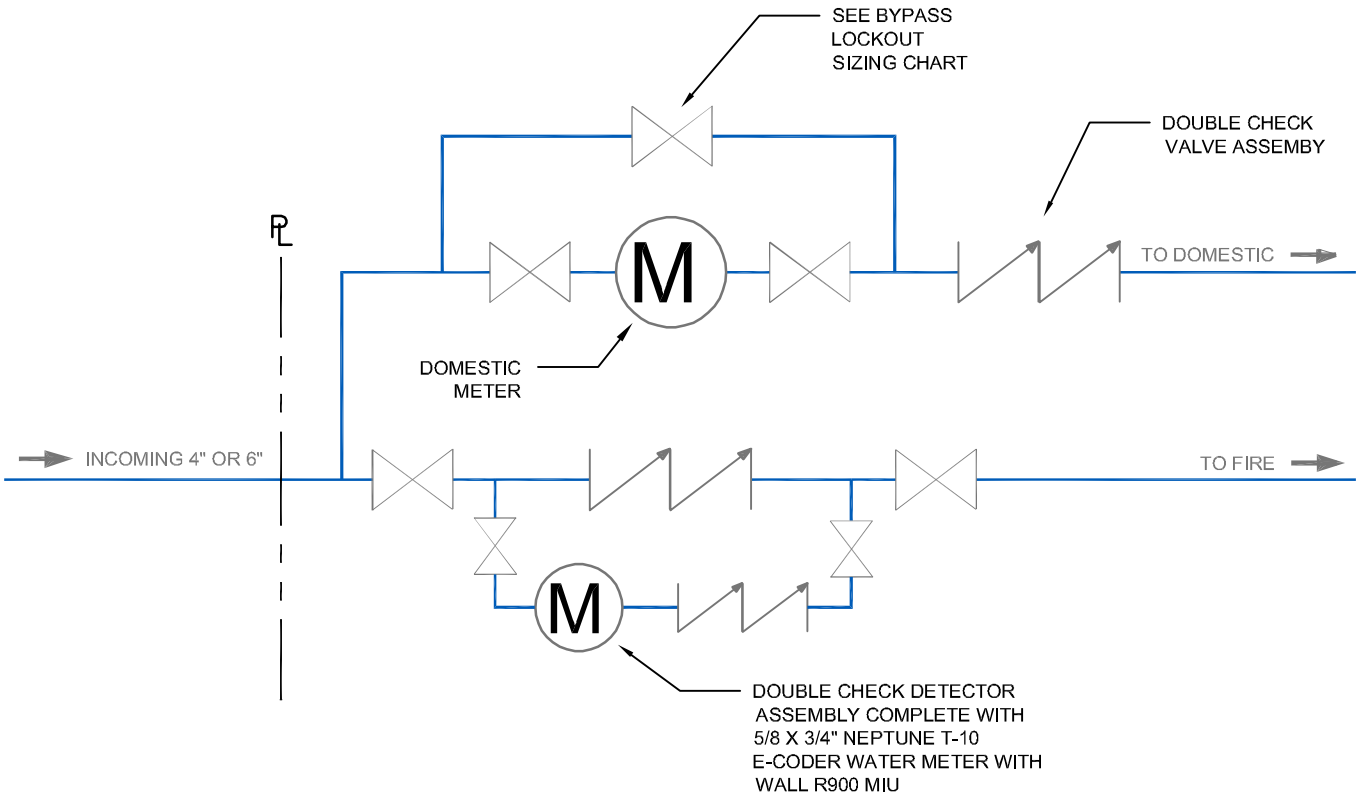

METER SIZING

PIPE SIZE	METER SIZE	METER SPECIFICATION
2" 2 $\frac{1}{2}$"	* 1 $\frac{1}{2}$" * 2"	NEPTUNE T-10 E-CODER WATER METER w/ WALL R900 MIU
3" 4" 6"	* As specified by the mechanical engineer on record.	NEPTUNE TRU/FLO COMPOUND E-CODER WATER METER w/ (2) WALL R900 MIU'S

BYPASS LOCKOUT SIZING

BYPASS SIZE	LOCKOUT MECHANISM
≤ 3" Ø	BALL VALVE C/W BRADY BS07A LOCKOUT, OR APPROVED ALTERNATIVE
≥ 4" Ø	GATE VALVE WITH APPROVED LOCKOUT

* DOMESTIC FLOW REQUIREMENTS AND METER SIZING TO BE CONFIRMED BY THE MECHANICAL ENGINEER

* R900 WALL METER INTERFACE UNIT (MIU) MOUNTED ON OUTSIDE OF BUILDING IN APPROPRIATELY ACCESSIBLE LOCATION, APPROXIMATELY 1.5m FROM SURFACE

* RUN APPROPRIATE QTY OF 3-CONDUCTOR *#22 AWG BLACK/GREEN/RED WIRE TO* MATCH NUMBER OF REGISTERS IN CONDUIT FROM MECHANICAL ROOM TO OUTSIDE OF BUILDING FOR WALL R900 MIU'S

NOTES
1. PIPE TO BE THE SAME AS INSIDE CHAMBERS.
2. MECHANICAL ROOM MUST BE HEATED.

MECHANICAL ROOM GENERAL SCHEMATIC

Langley City
THE PLACE TO BE

DRAWN	June 2021
REVISED	
SCALE	N.T.S.
	SS-W13

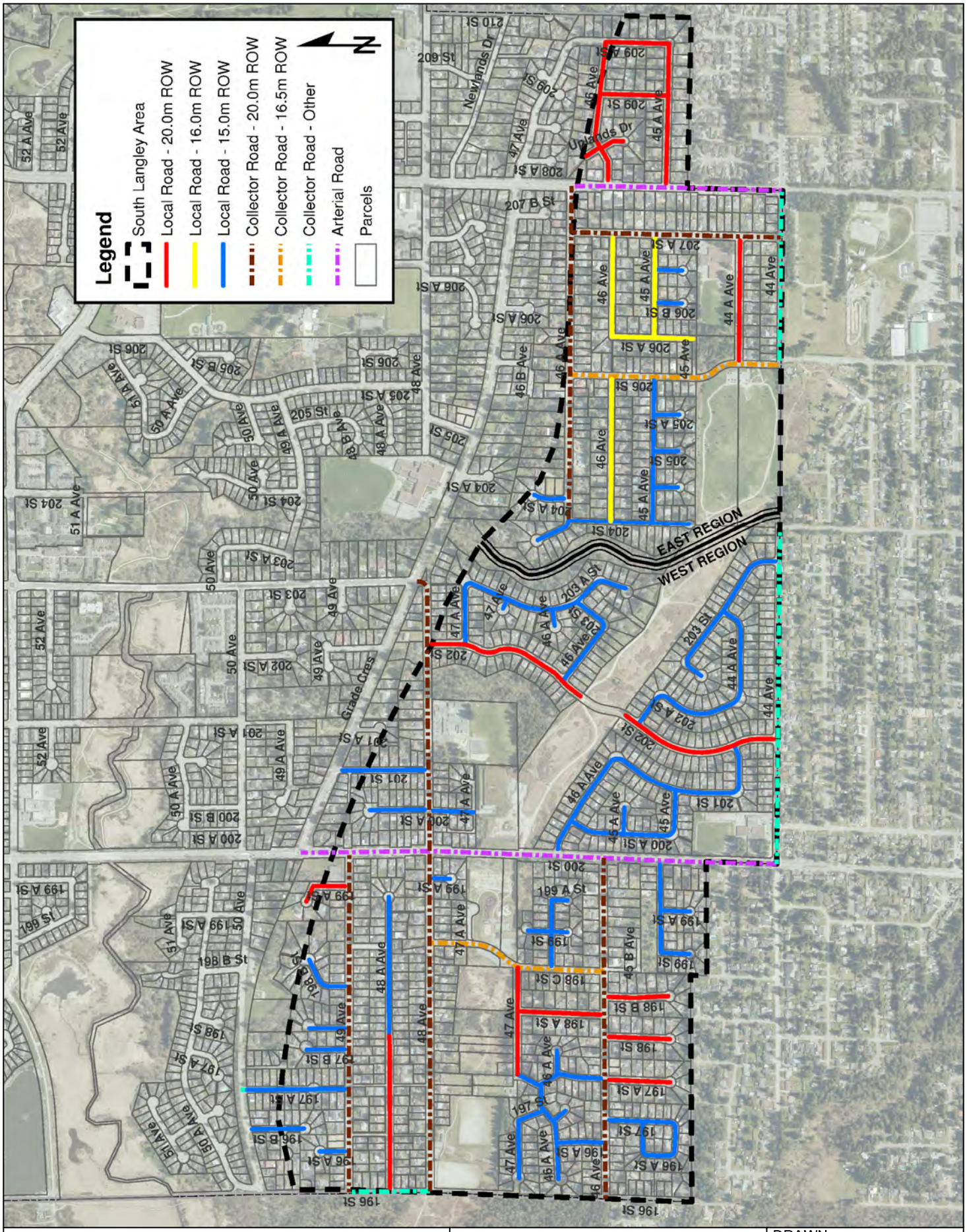

SOUTH LANGLEY DESIGN CRITERIA AREA

Langley City
THE PLACE TO BE

DRAWN	Dec 2019
REVISED	
SCALE	N.T.S.
	SS-SL01

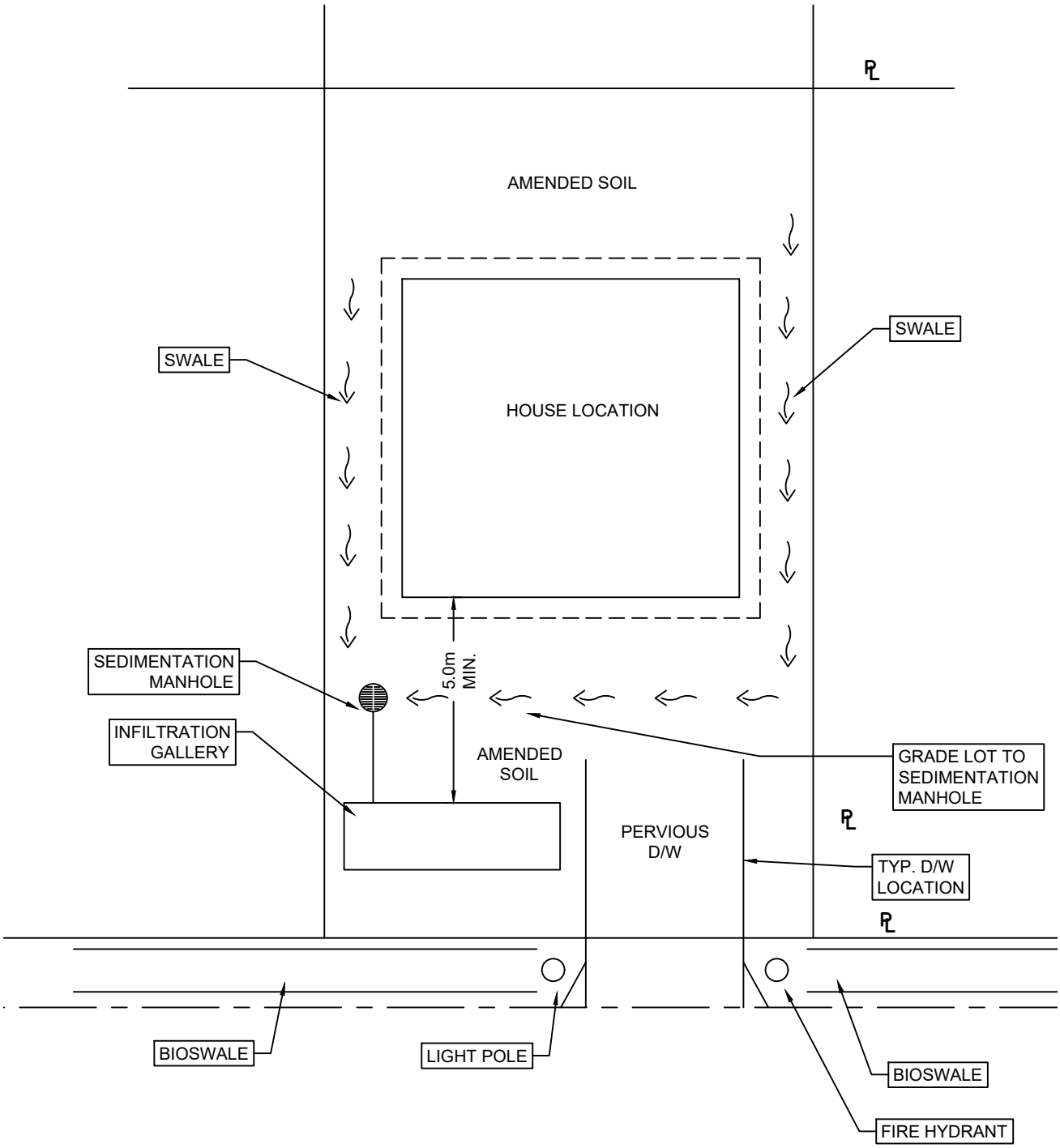

1 / - TYPICAL PLAN

NOT TO SCALE

TYPICAL INFILTRATION GALLERY SYSTEM (GRADED TO FRONT) - SINGLE FAMILY RESIDENTIAL	Langley City THE PLACE TO BE	DRAWN April 2020
		REVISED April 2021
		SCALE N.T.S.
		SS-SL02

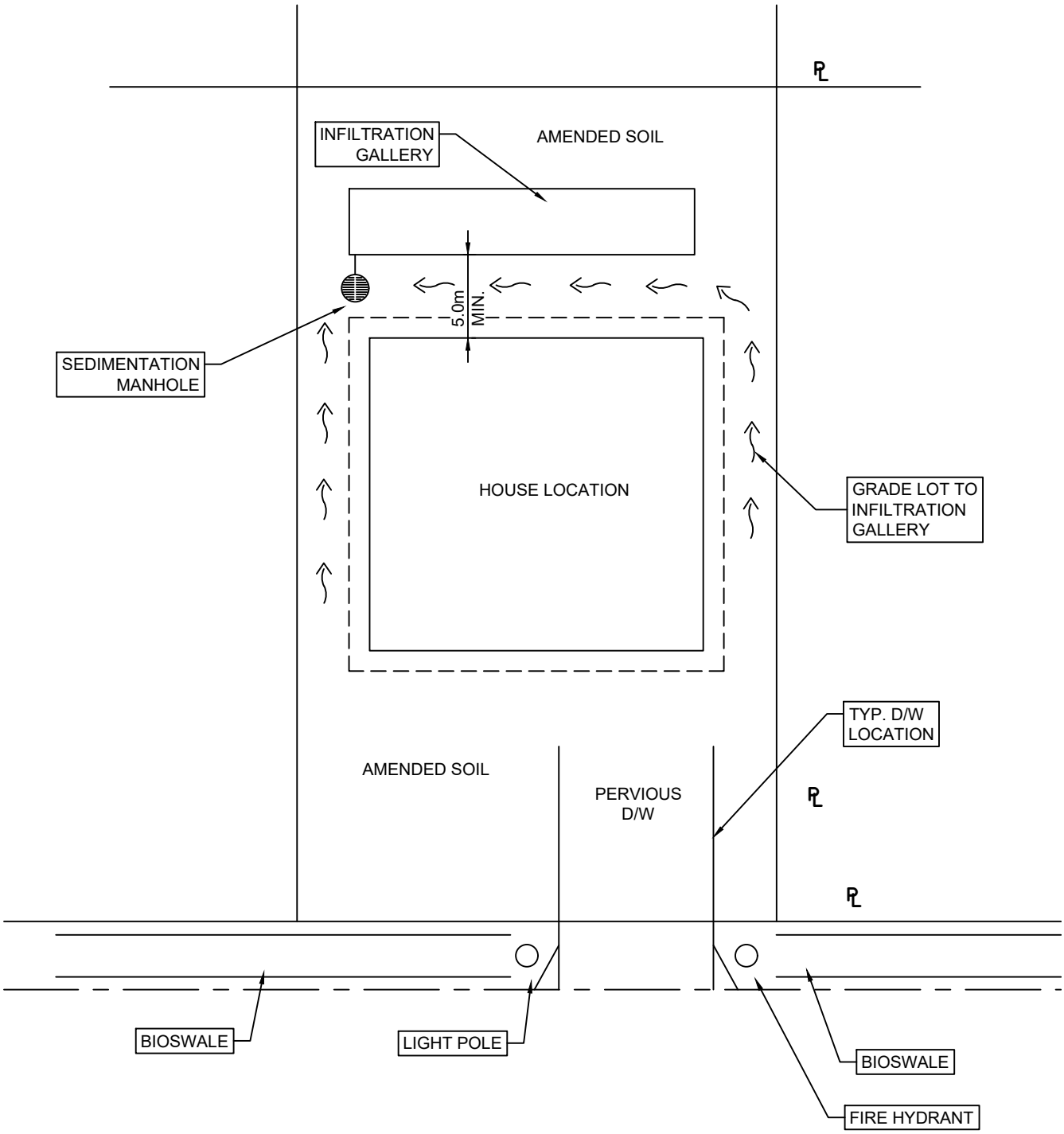

1 / - TYPICAL PLAN

NOT TO SCALE

TYPICAL INFILTRATION GALLERY SYSTEM (GRADED TO BACK) - SINGLE FAMILY RESIDENTIAL	Langley City THE PLACE TO BE	DRAWN April 2020
		REVISED April 2021
		SCALE N.T.S.
		SS-SL03

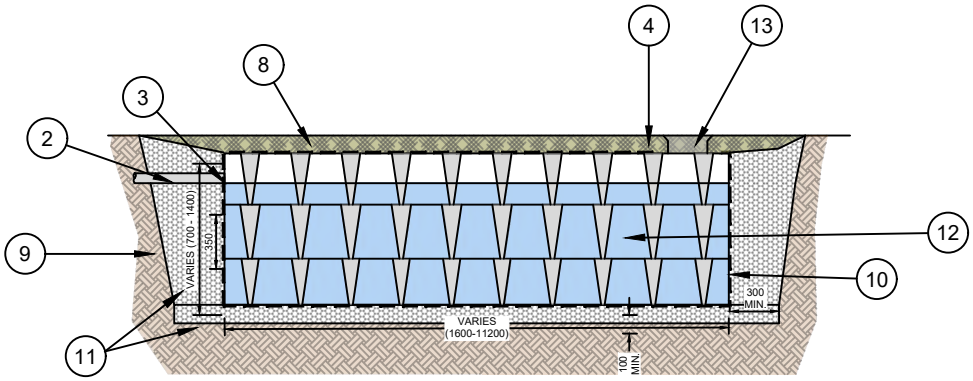

1 INFILTRATION GALLERY SECTION

NOT TO SCALE

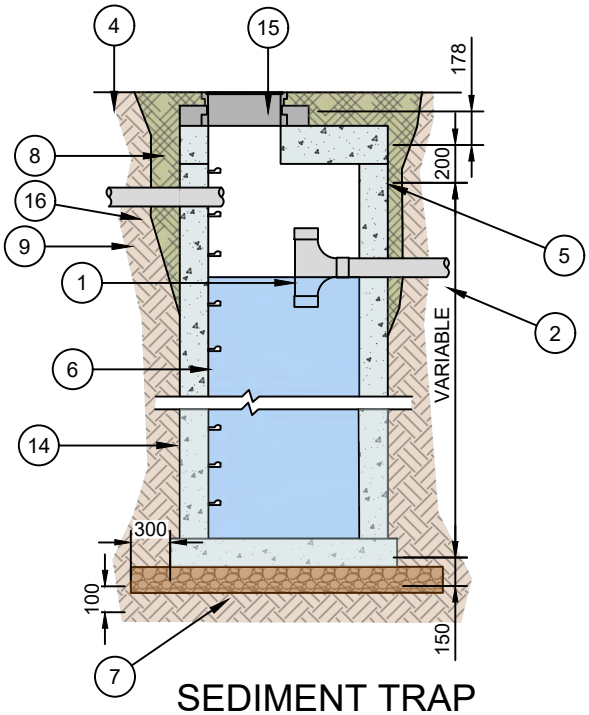

2 SEDIMENT TRAP MANHOLE SECTION

NOT TO SCALE

NOTE:
THE USE OF EQUIVALENT SEDIMENT TRAP MANHOLE PRODUCTS SUCH AS GRAF "INFILTRATION FILTER SHAFT" THAT ARE EASIER TO MAINTAIN ARE ALSO ACCEPTABLE.

1. PVC SOLID PIPE C/W INLET TEE
2. 100mm PVC SOLID PIPE (MIN. 0.5% SLOPE)
3. PIPE BOOT
4. FINISHED GRADE
5. SEAL JOINTS WITH CEMENT GROUT OR APPROVED MASTIC
6. LADDER RUNG
7. 25mm CRUSHED GRAVEL OR DRAIN ROCK BASE
8. 400mm AMENDED SOIL OR DRIVEWAY PAVEMENT
9. UNDISTURBED GROUND
10. GEOTEXTILE
11. 19mm-25mm DRAIN ROCK
12. INFILTRATION GALLERY (GRAF ECOBLOC MAXX OR CITY-APPROVED EQUAL)
13. INFILTRATION GALLERY ACCESS SHAFT
14. 900mm MANHOLE BARREL
15. MANHOLE FRAME AND GRATED COVER
16. INFLOWS FROM BUILDING FOUNDATION DRAIN AND SURFACE RUNOFF

NOTES:
ALL PRECAST SECTIONS SHALL CONFORM TO THE REQUIREMENTS OF ASTM C478.

PROVIDE A MIN. OF 150mm OF 25mm OR 19mm CLEAN CRUSHED ROCK UNDER ALL PIPES.

INVERT SHALL BE LEVEL AND SMOOTH.

GEOTEXTILE TO BE NON-WOVEN FABRIC WITH MIN. 400mm OVERLAP.

DRAIN ROCK TO BE CLEAN ROUND OR CRUSHED GRAVEL WITH A 40% POROSITY.

LEVEL OF MANHOLE FRAME AND COVER TO BE LOWER THAN MBE.

INFILTRATION GALLERY INSPECTION ACCESS CAN BE PROVIDED THROUGH VERTICAL PIPE ATTACHED TO SIDE OF TANK OR THROUGH SHAFT SUCH AS GRAF VARIO 800 AS SHOWN.

INFILTRATION GALLERY AND SEDIMENTATION MANHOLE

Langley City
THE PLACE TO BE

DRAWN	April 2020
REVISED	May 2021
SCALE	N.T.S.

SS-SL04

INFILTRATION GALLERY
OVERFLOW ACCESS MANHOLE

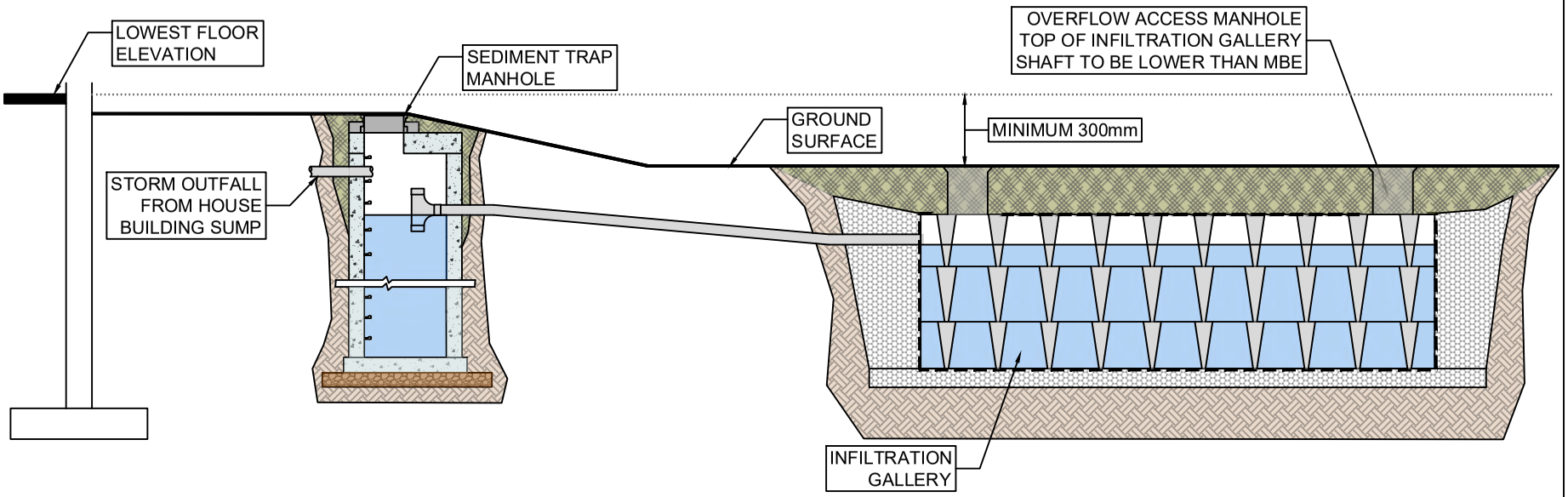

NOTES:

1. MBE OR SKIM COAT ELEVATION FOR THE PROPOSED BUILDING MUST BE ABOVE THE SURROUNDING GRADE.
2. ALL 'BELOW GRADE' FLOOR, OR CRAWLSPACE AREAS REQUIRE THE PROTECTION OF A FOUNDATION PERIMETER DRAINAGE SYSTEM.

FOR ILLUSTRATION PURPOSES ONLY

EcoBloc Inspect Smart Plus Shaft

or

Approved Equivalent

(to provide access to the Infiltration Gallery for inspection and/or flushing)

Inflow from Sediment Trap Manhole

Langley City
THE PLACE TO BE

DRAWN	April 2020
REVISED	April 2021
SCALE	N.T.S.

SS-SL05

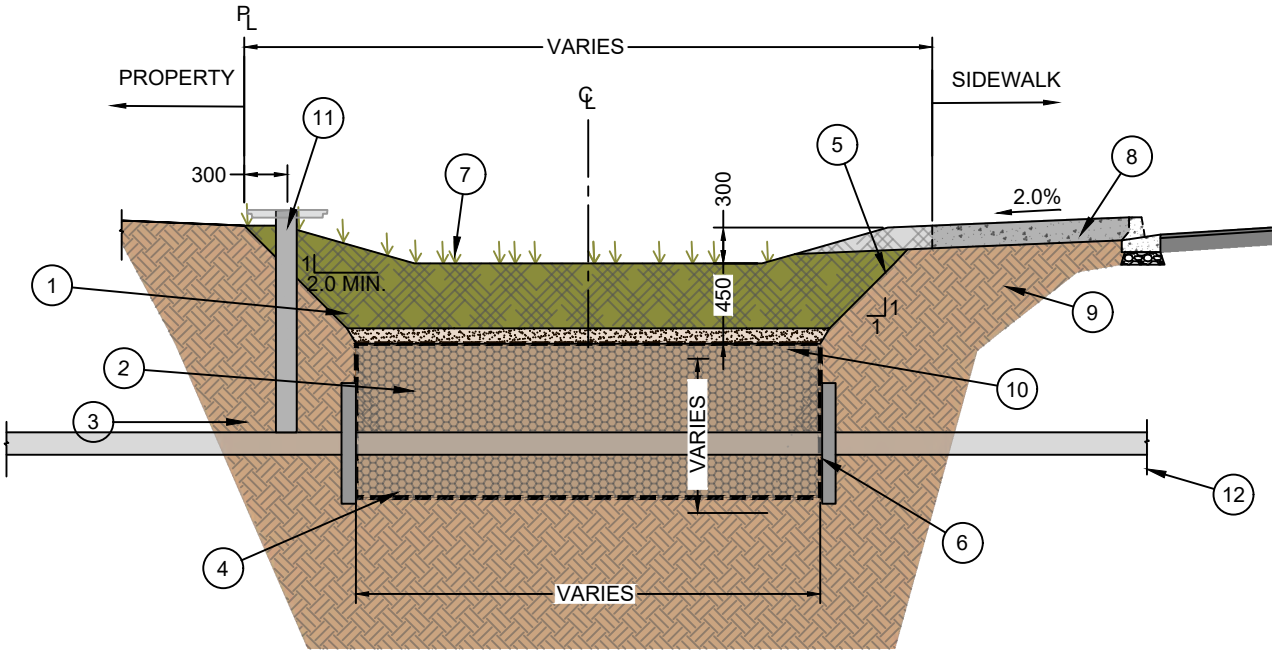

1 BIOSWALE SECTION

NOT TO SCALE

1. PERMEABLE GROWING MEDIUM
2. 19mm-25mm DRAIN ROCK RESERVOIR
3. EXISTING SCARIFIED SUBSOIL
4. GEOTEXTILE ALONG ALL SIDES OF RESERVOIR
5. PROVIDE EROSION CONTROL ALONG ALL SIDES OF DRAINAGE INLETS
6. TYPICAL UTILITY CROSSING TRENCH DAMS FOR SANITARY AND WATER SERVICES
7. PLANTING IN ACCORDANCE WITH THE CITY OF LANGLEY DESIGN CRITERIA MANUAL
8. SIDEWALK C/W CURB INLET AND TRENCH DRAIN, DOBNEY B-24 FTH & 18-24 WAVE OR CITY ENGINEER APPROVED EQUIVALENT (SEE PICTURE)
9. 150mm CRUSHED GRANULAR BEDDING
10. SAND
11. INSPECTION CHAMBER (IC) OR WATER METER BOX (SEE DETAILS IN RELATED DRAWINGS)
12. CITY WATER/SANITARY SERVICE

NOTES:
GEOTEXTILE TO BE NON-WOVEN FABRIC WITH MIN. 400mm OVERLAP

DRAIN ROCK TO BE CLEAN ROUND OR CRUSHED GRAVEL WITH A 40% POROSITY.

8 FOR ILLUSTRATION PURPOSES ONLY

BIOSWALE	
DRAWN	April 2020
REVISED	April 2021
SCALE	N.T.S.
	SS-SL06

15.0m R.O.W. ROAD
SOUTH LANGLEY - WITH BIOSWALE TYPE A

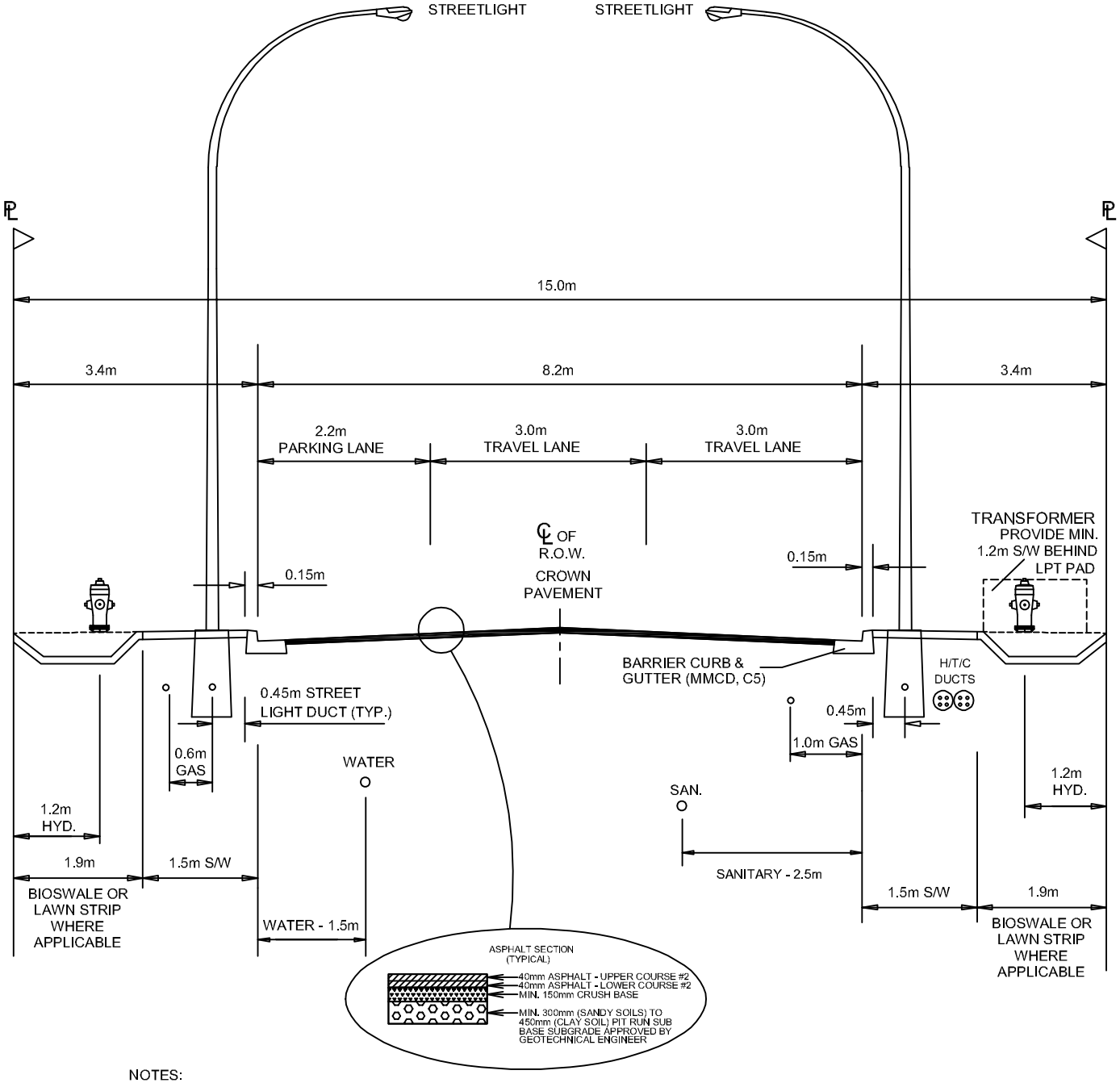

NOTES:

1. INCREASE CROSSFALL TO 3.25% WHEN LONGITUDINAL SLOPE EXCEEDS 5%
2. SIDEWALK BUMP OUTS MIN. 1.2m AROUND STREET LIGHT BASE
3. THE CITY ENGINEER MAY REQUIRE MODIFICATIONS TO THIS CROSS SECTION TO MEET SITE-SPECIFIC SAFETY OBJECTIVES.

Langley City
THE PLACE TO BE

DRAWN	May 2021
REVISED	
SCALE	N.T.S.

SS-SL07

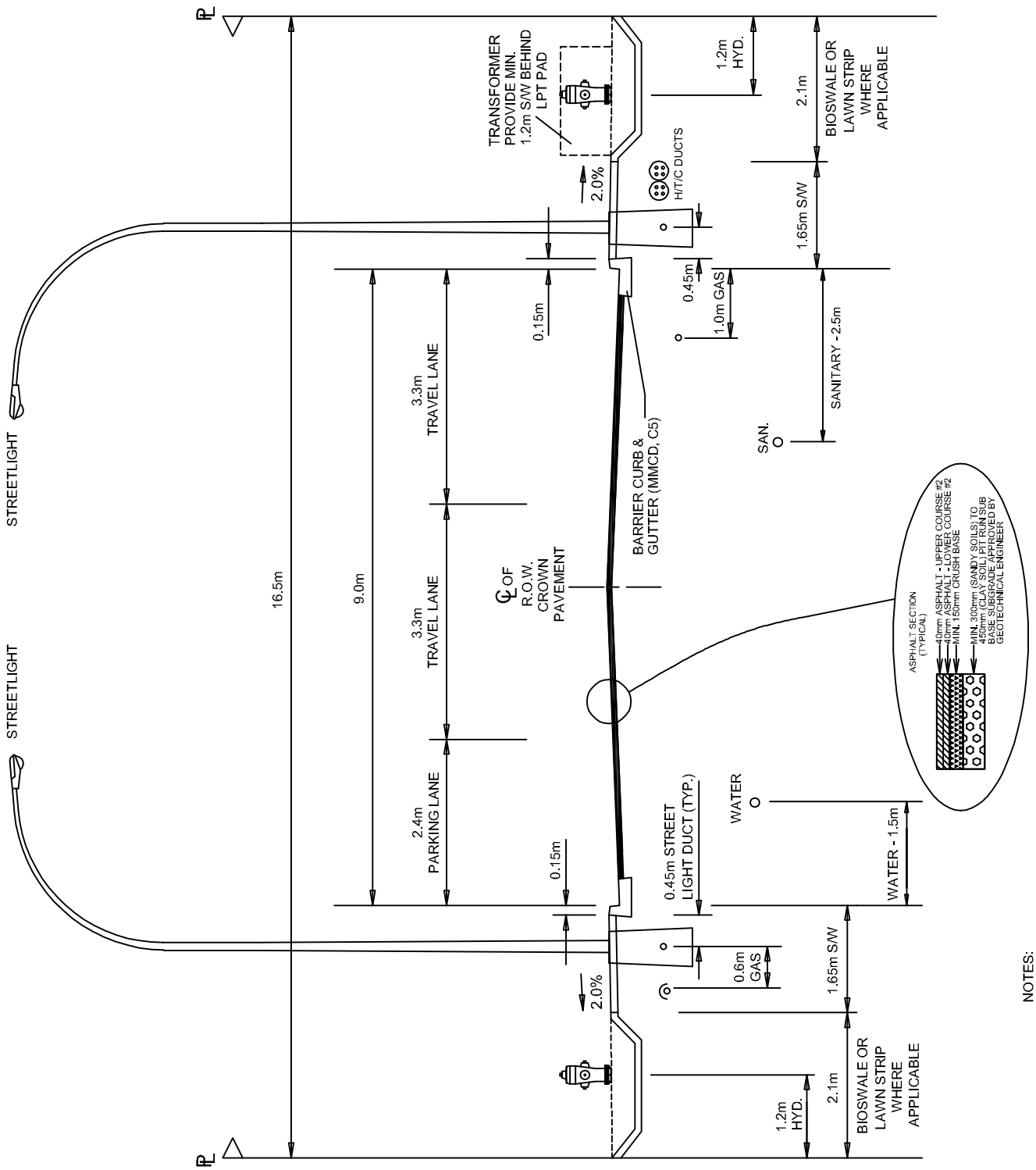

NOTES:
1. INCREASE CROSSFALL TO 3.25% WHEN LONGITUDINAL SLOPE EXCEEDS 5%
2. SIDEWALK BUMP OUTS MIN. 1.2m AROUND STREET LIGHT BASE
3. THE CITY ENGINEER MAY REQUIRE MODIFICATIONS TO THIS CROSS SECTION TO MEET SITE-SPECIFIC SAFETY OBJECTIVES.

16.5m R.O.W. ROAD SOUTH LANGLEY - WITH BIOSWALE TYPE B

Langley City
THE PLACE TO BE

DRAWN	May 2021
REVISED	
SCALE	N.T.S.
	SS-SL08

20.0m R.O.W. ROAD
SOUTH LANGLEY - WITH BIOSWALE TYPE C

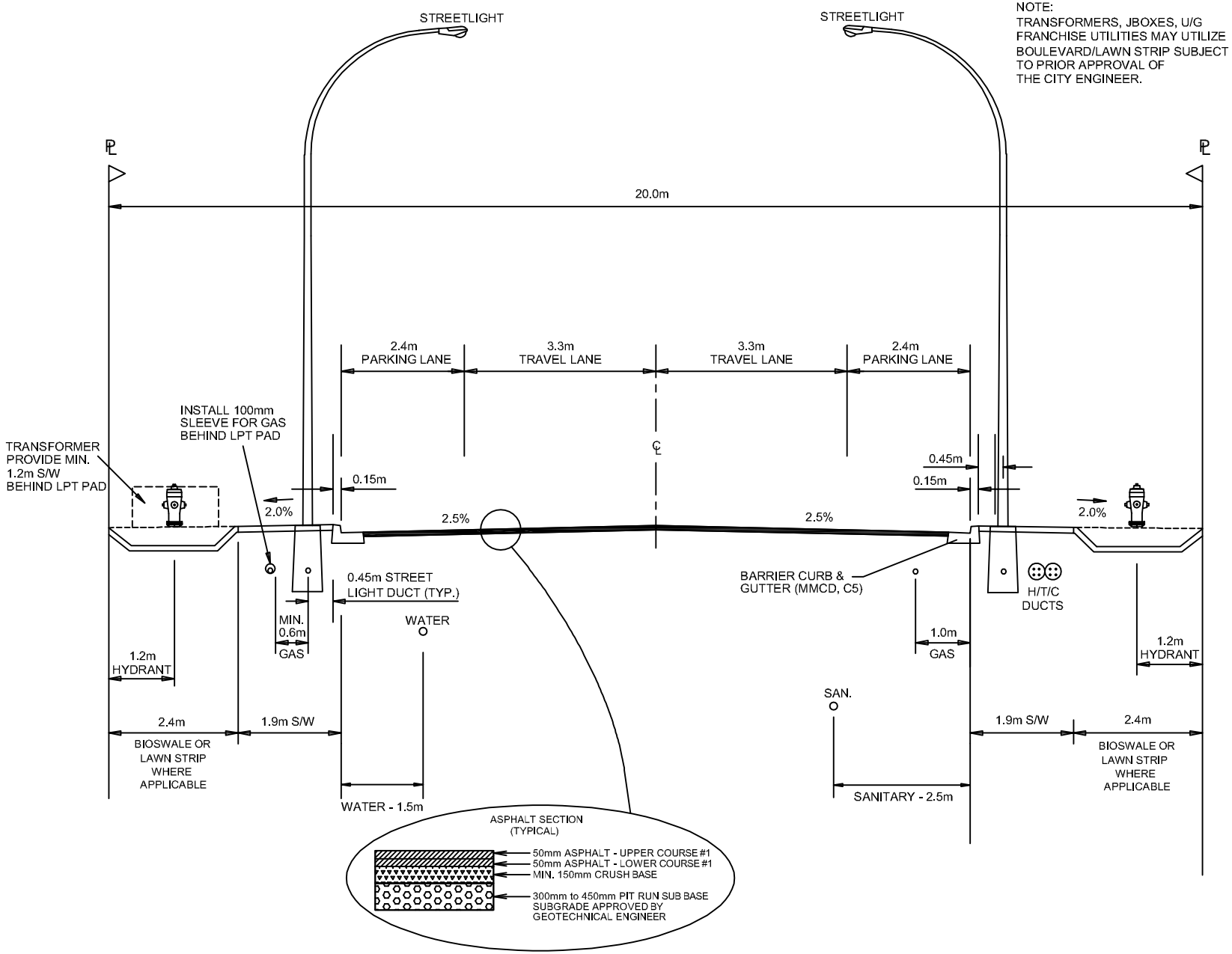

NOTES:

1. INCREASE CROSSFALL TO 3.25% WHEN LONGITUDINAL SLOPE EXCEEDS 5%
2. SIDEWALK BUMP OUTS MIN. 1.2m AROUND STREET LIGHT BASE
3. THE CITY ENGINEER MAY REQUIRE MODIFICATIONS TO THIS CROSS SECTION TO MEET SITE-SPECIFIC SAFETY OBJECTIVES.

Langley City
THE PLACE TO BE

DRAWN	May 2021
REVISED	
SCALE	N.T.S.

SS-SL09

TYPICAL UTILITY OFFSET LOCATIONS	
WATER MAIN	1.0 - 1.5m OFFSET FROM CURB
SANITARY SEWER	1.0 - 1.3m OFFSET FROM CURB, MAINTAIN 3.0m SEPERATION FROM WATER MAIN
STORM SEWER	2.0 - 2.3m OFFSET FROM CURB, MAINTAIN 3.0m SEPERATION FROM WATER MAIN
FIRE HYDRANT	1.2m OFFSET FROM PROPERTY LINE
STREET LIGHT	0.9m OFFSET FROM BACK OF CURB
GAS MAIN	2.5m OFFSET FROM CURB ON BIOSWALE SIDE 0.6m OFFSET FROM PROPERTY LINE ON SIDEWALK SIDE
HYDRO/TELUS/CABLE	2.0m OFFSET FROM PROPERTY LINE

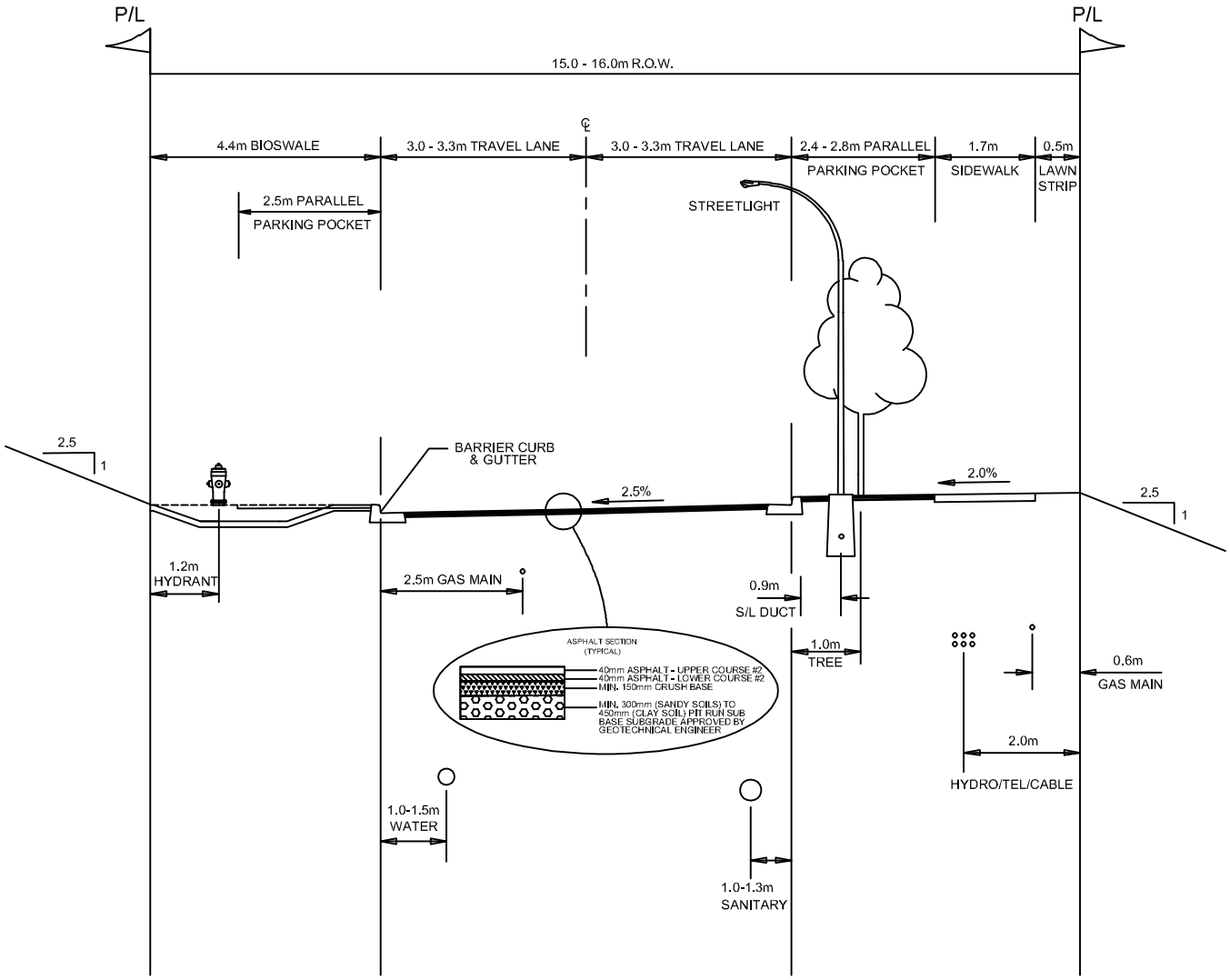

NOTES:
1. INCREASE CROSSFALL TO 3.25% WHEN LONGITUDINAL SLOPE EXCEEDS 5%
2. SIDEWALK BUMP OUTS MIN. 1.2m AROUND STREET LIGHT BASE
3. 15.0m ROW FOR NON-BUS ROUTES ONLY
4. THE CITY ENGINEER MAY REQUIRE MODIFICATIONS TO THIS CROSS SECTION TO MEET SITE-SPECIFIC SAFETY OBJECTIVES.

15.0-16.0m R.O.W. ROAD SOUTH LANGLEY - WITH BIOSWALE TYPE D

Langley City
THE PLACE TO BE

DRAWN	May 2021
REVISED	
SCALE	N.T.S.
	SS-SL10

Onsite Infiltration Gallery Design for 100-Year Storm

Project Location:	South Langley				**Date:**	May 2, 2021				
Designer:	XXXXX				**Note:** Yellow highlighted cells in this template are those that require designer's input					
Groundwater Table Depth			3	m						
Infiltration Module Dimensions (Ecobloc Inspect Smart) in m:					**Length**	0.8	**Width**	0.8	**Depth**	0.33
Lot Area			557	m^2	Entire lot area shall be used for runoff calculations, not just rooftops,etc.					
Post-Development Runoff Coefficient				0.65	For 100-Yr Single Family with Rainwater BMPs					
Onsite Infiltration Trench Dimensions (Selected by Designer)										
Length										
No. of Modules		7	5.6	m	Maximum allowable 8.8 m for a 16 m front line lot to account for 7 m driveway					
Width										
No. of Modules		3	2.4	m	Maximum allowable 2.4 m to account for building setback and property line clearance					
Distance to Property Line			1.1	m						
Depth										
No. of Modules		2	0.66	m						
Distance to Groundwater			2.34	m	Bottom of the Infiltration Gallery has to be at least 0.6 m above the groundwater table					
Tank Storage Volume			8.52	m^3	Apply "Reservoir Coefficient" of 0.96 for volume calculations					
Drain Rocks Dimensions					With minimum of 0.1 m rocks beneath the Gallery and min of 0.3 m all around it					
Porosity			0.40							
Drain Rock Volume			5.27							
Net Drain Rock Storage Vol.			2.11							
Total Storage Volume			**10.62**	**m^3**						
Coefficients in 100-yr IDF Equation (Kwantlen Park data add 20% for Climate Change Factor)							No. of modules need		42	
A	29.158	B	-0.564		Based on "SS-D01 Rainfall Intensity Duration Frequency"					
Outflow Data (Based on Geotechnical Report)										
Final Infiltration Rate			126.0	mm/hr	0.0021	m/s				
Gallery Design Safety Factor (S.F.)			1.00		The proper S.F. is set by the City Engineer, once the first desgn draft is submitted by the Consulting Engineer.					
Infiltration vol. rate at Infilt. Gallry			0.001046	m^3/s	(Infiltration Rate * Infiltration Gallery area, considering all sides)					
Time to empty from full capacity			7.1	Hour	(storage volmue / outflow rate)					

Iteration Chart to Determine Maximum Storage Volume Required

TIME	Rainfall Intensity (with Climate Change)	Peak Flow	Inflow Volume	Infiltration @ Infiltration Gallery	Storage Volume	Overflow Volume from Infiltration Gallery
(min)	(mm/hr)	(m^3/S)	(m^3)	(m^3)	(m^3)	(m^3)
5	142.1	0.014291	4.29	0.31	3.97	0.00
10	96.1	0.009667	5.80	0.63	5.17	0.00
15	76.5	0.007691	6.92	0.94	5.98	0.00
20	65.0	0.006539	7.85	1.25	6.59	0.00
.....	.....	.....	.....	.....	.....	.....
.....	.....	.....	.....	.....	.....	.....
590	9.6	0.000969	34.32	37.01	-2.69	0.00
595	9.6	0.000965	34.44	37.33	-2.88	0.00
600	9.5	0.000960	34.57	37.64	-3.07	0.00
720	8.6	0.000866	37.43	45.17	-7.74	0.00
960	7.3	0.000737	42.43	60.22	-17.79	0.00
1200	6.5	0.000650	46.77	75.28	-28.51	0.00
1440	5.8	0.000586	50.64	90.33	-39.69	0.00
Maximum Storage Volume Required:				**9.61**	**m^3**	

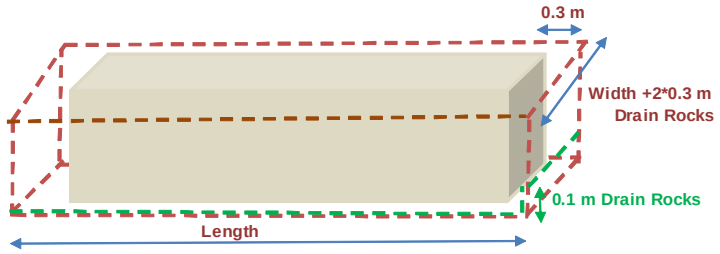

Drain rocks Dimensions:

Length (m) = Infilt. Gallery Length + 2*0.3

Width (m) = Infilt. Galerry width + 2*0.3

Depth (m) = Infilt. Gallery depth + 0.1

ONSITE INFILTRATION DESIGN TEMPLATE

Langley City
THE PLACE TO BE

DRAWN	May 2021
REVISED	
SCALE	N.T.S.

SS-SL11